| ROUTE NO. | SECTION | COUNTY | TOTAL SHEETS | SHEET NO. |
|---|---|---|---|---|
| S. B. I. F. A. | 01-00014-01-BT | MADISON | 160 | 87 |

97223

# STATE OF ILLINOIS
# DEPARTMENT OF TRANSPORTATION

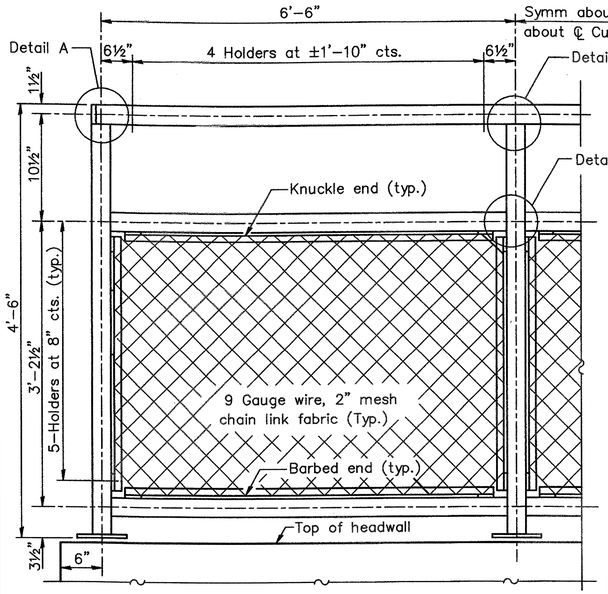


BICYCLE RAILING ELEVATION AT HEADWALL

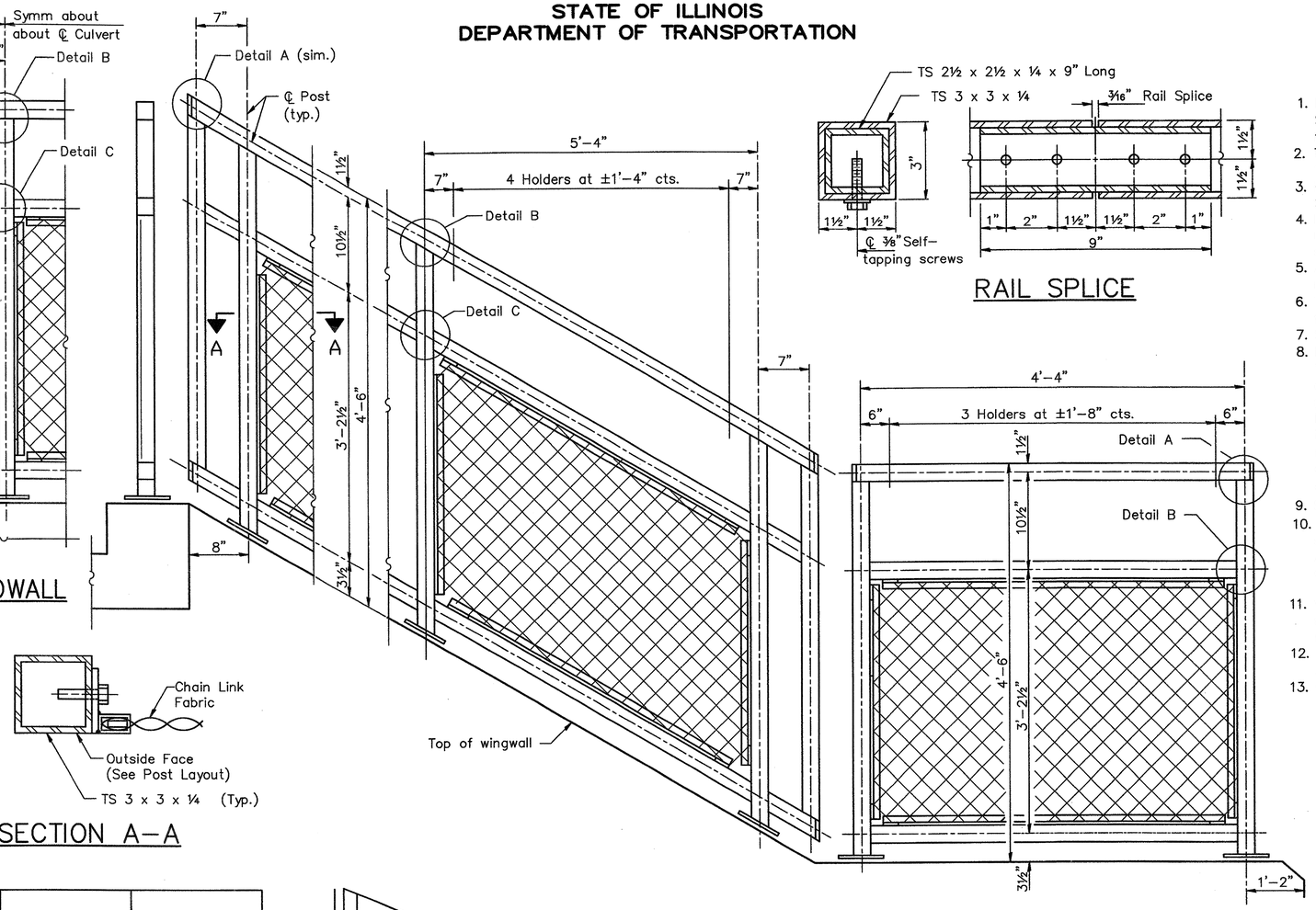


BICYCLE RAILING ELEVATION AT WINGWALL




RAIL SPLICE




SECTION A-A

## NOTES

1. Railing shall be according to Section 509 of the Standard Specifications, except as noted, and will be paid for at the Contract Unit Price per foot for Bicycle Railing.
2. The 9 gauge fabric ties shall be according to Article 1006.27 (d) of the Standard Specifications.
3. Installation of the chain link fabric shall be according to Section 664 of the Standard Specifications.
4. Hollow structural steel tubing shall conform to the requirements of ASTM designation A 500, Grade B, structural steel tubing.
5. All other steel shapes and plates shall conform to the requirements of AASHTO M 270 Grade 250.
6. The chain link fabric shall be placed along the outside face as shown on Section A-A and the Post Layout Plan.
7. Stretcher bars shall be used at all four sides of each panel.
8. If the option of drilling and epoxy grouting the anchor rods is chosen, the Contractor shall use the capsule or the adhesive cartridge type anchor rods that have been previously tested and given a prior approval by the Department. The Contractor shall install these anchor rods in pre-drilled holes according to the manufacturer's recommendations and procedures. The capsule or the adhesive cartridge shall be sealed with premeasured amounts of the adhesive chemical.
9. Space reinforcement to miss anchor rods.
10. All posts, railing, splices, anchor devices, and bent plates shall be galvanized after shop fabrication according to AASHTO M 111 and ASTM A 385. All bolts, nuts, washers and anchor rods shall be galvanized according to AASHTO M 232 except stainless steel bolts as noted.
11. Vent holes for galvanizing shall be placed in the posts and rails at locations that will not allow the accumulation of moisture in the members.
12. The chain link fabric shall conform to the requirements of Article 1006.27(a)(1)a, b or c of the Standard Specifications.
13. Coordinate bicycle railing post locations with box culvert end section shop drawings prior to fabrication. Dimensional changes will be allowed only under the written authorization of the Engineer.

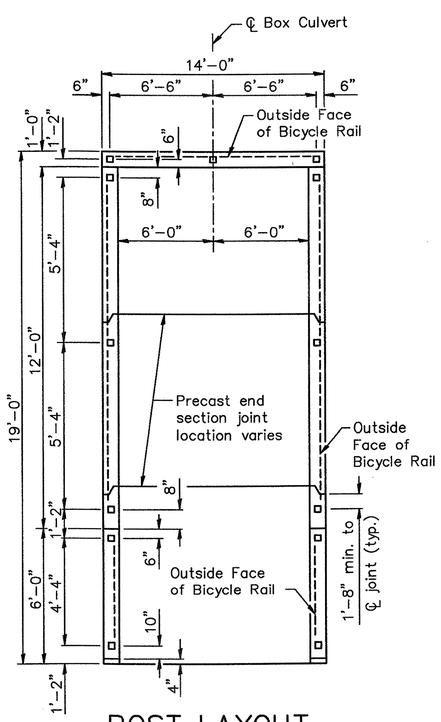


POST LAYOUT

All dimensions measured Horizontally.

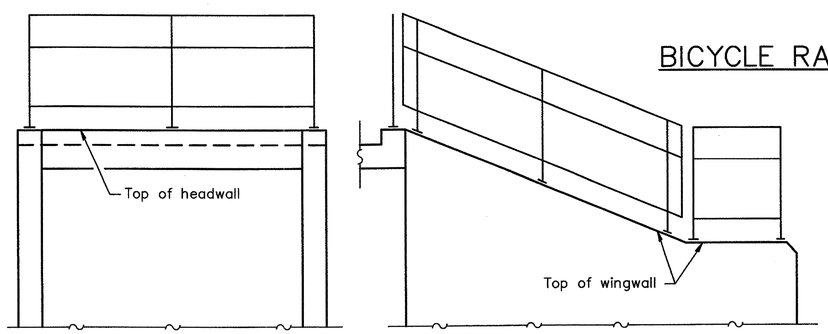


ELEVATION

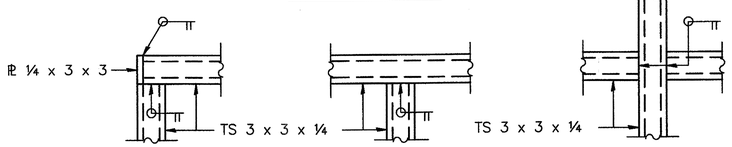


DETAIL A DETAIL B DETAIL C

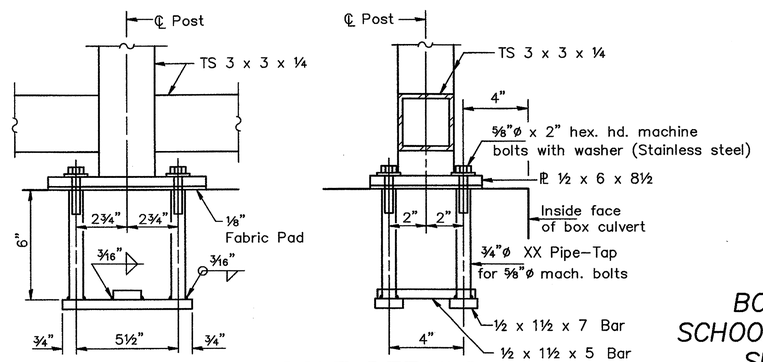


ANCHOR BOLT DETAILS

(In lieu of the cast-in-place anchor device shown, the Contractor has the option of drilling and epoxy grouting M16 anchor rods for the connections on top of the parapets. Embedment shall be according to the manufacturer's specifications.)

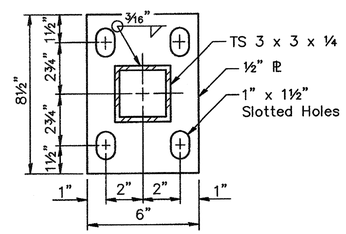


BASE PL

*BICYCLE RAILING*
*BOX CULVERTS, 12' X 8'*
*SCHOOLHOUSE TRAIL CONNECTOR*
*SEC. 01-00014-01-BT*
*MADISON COUNTY TRANSIT*

H:\PC21240\dwg\standard_bicy_rail.dwg, 12/05/2013 10:08:35 AM