ROUTE NO.	SECTION	COUNTY	TOTAL SHEETS	SHEET NO.
S. B. I. F. A.	01-00014-01-BT	MADISON	160	80

SHEET NO. 1
2 SHEETS

97223

STATE OF ILLINOIS
DEPARTMENT OF TRANSPORTATION

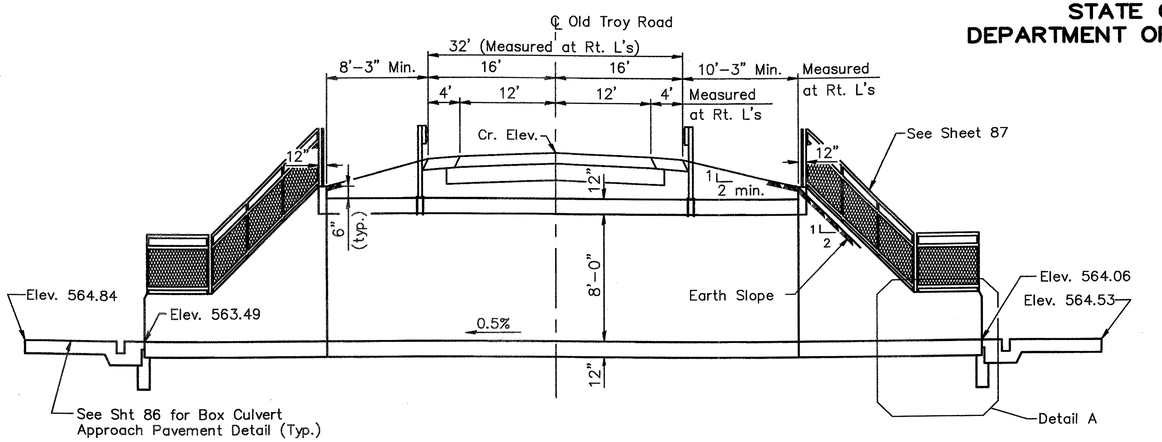

LONGITUDINAL SECTION
(Looking West)

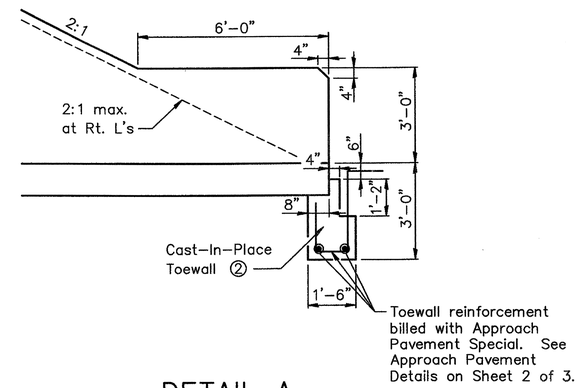

DETAIL A

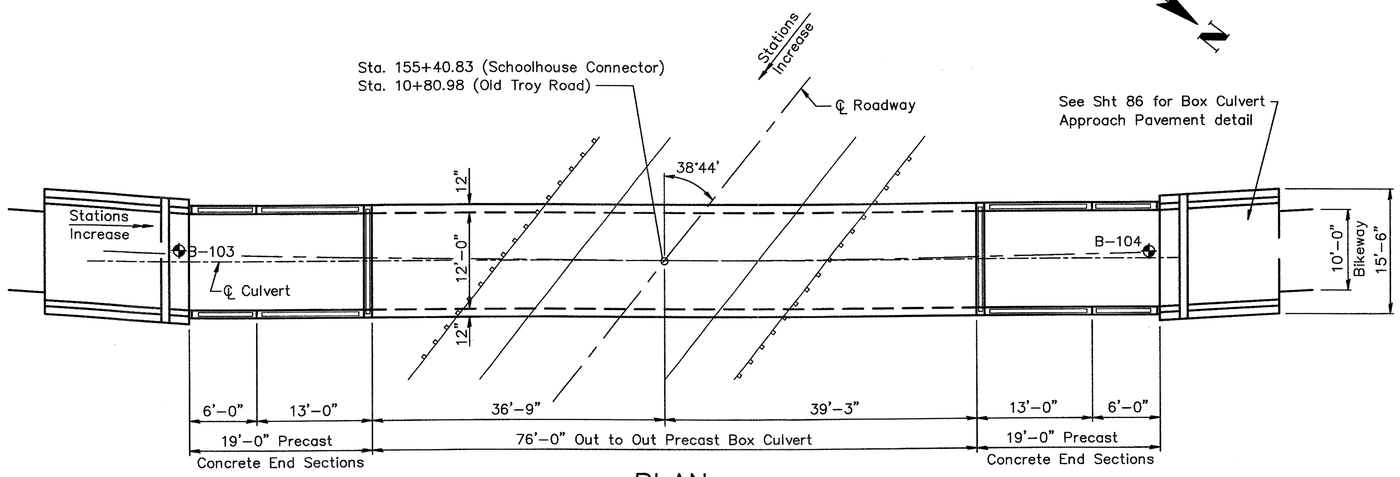

PLAN

NOTES

1. Exposed edges shall have a 3/4" chamfer unless otherwise noted.
2. The Cast-In-Place toewall will not be paid for separately, but shall be included in the cost for "Box Culvert End Sections" Approximately 2.9 c.y. of concrete will be required for toewalls.
3. This box culvert has an approximate fill height of 2.7'. The Precast Box Culvert shall be designed in accordance with AASHTO M273 except that the aggregate shall conform to the requirements of Article 1003.02 of the Standard Specifications with the exception of gradation.
4. The Contractor shall submit shop drawings and calculations for the Precast Concrete Box Culvert and Precast Concrete Box Culvert End Sections. Shop Drawings and calculations shall be sealed by a registered Structural Engineer in the State of Illinois. See Special Provisions.
5. Trench backfill shall be incidental to the "Precast Concrete Box Culverts 12' x 8' (M273)" and "Box Culvert End Sections".
6. See Sheet 87 for Bicycle Railing post locations. Coordinate bicycle railing post locations with box culvert end section joint locations. Dimensional changes will be allowed only under the written authorization of the Engineer.
7. The maximum permissible box culvert floor tolerance shall be 3/8" vertical and 5/8" horizontal. If actual offsets exceed these limitations, the joint shall be repaired with an epoxy mortar in accordance with Article 1025.02 of the Standard Specifications. See Special Provisions.
8. Individual segments of Box Culvert End Sections shall be mechanically fastened after placement. See Special Provisions.
9. Provide a slip resistant finish to the floor of the Precast Concrete Box Culvert and Box Culvert End Sections. Cost included in "Precast Concrete Box Culverts 12' x 8' (M273)" and "Box Culvert End Sections".
10. See Roadway Plans for underground utility locations.
11. Connection between the guardrail and the precast concrete structure shall be provided by the precast manufacturer and detailed in the shop drawings for approval. Cost incidental to "Precast Concrete Box Culvert". See special provisions.
12. See Bikeway Plans for profile grade of Schoolhouse Connector.

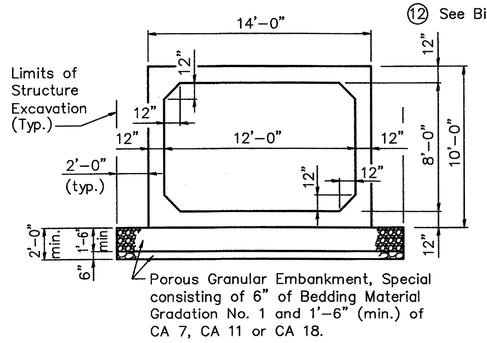

SECTION THRU BARREL

TOTAL BILL OF MATERIAL

ITEM	UNITS	TOTAL
Porous Granular Embankment, Special	Cu. Yd.	152
Structure Excavation (Special)	Cu. yd.	836
Box Culvert End Sections	Each	2
Precast Concrete Box Culvert 12' X 8' (M273)	Foot	76
Approach Pavement Special	Sq. Yd.	52
Bicycle Railing	Foot	86

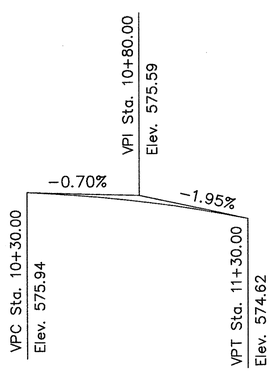

PROFILE GRADE
OLD TROY ROAD

LOADING HS20
DESIGN SPECIFICATIONS
1996 AASHTO with 1997 thru 2002 interims

DESIGN STRESSES
FIELD UNITS

Precast
f'c = 5,000 psi
fy = 65,000 psi (reinforcement)

Cast-In-Place
f'c = 3,500 psi
fy = 60,000 psi (reinforcement)

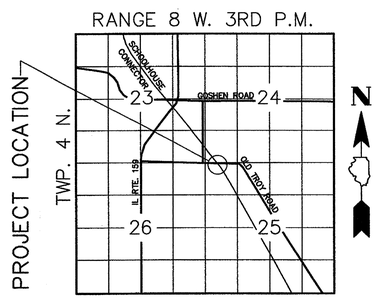

LOCATION SKETCH

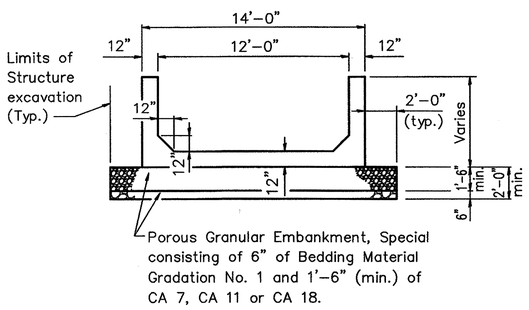

SECTION THRU END SECTIONS

GENERAL PLAN
OLD TROY ROAD EAST/WEST
OVER SCHOOLHOUSE CONNECTOR
SEC. 01-00014-01-BT
MADISON COUNTY TRANSIT
STA. 155+40.83

H:\PC\PROJ\DWG\BRIDGE\BOX\B_TROY_CULV.DWG, 12/05/2003 10:12:42 AM