BENCH MARK: BRASS DISK IN PAVEMENT AT ℄ ILL. RTE. 162, STA. 10+09.74, 48.86' LT., ELEV. 578.56.
EXISTING STRUCTURE: NONE.

SHEET NO. 1
4 SHEETS

SECTION	COUNTY	TOTAL SHEETS	SHEET NO.
01-00014-01-BT	MADISON	160	72
STA. 10+09.90			

97223

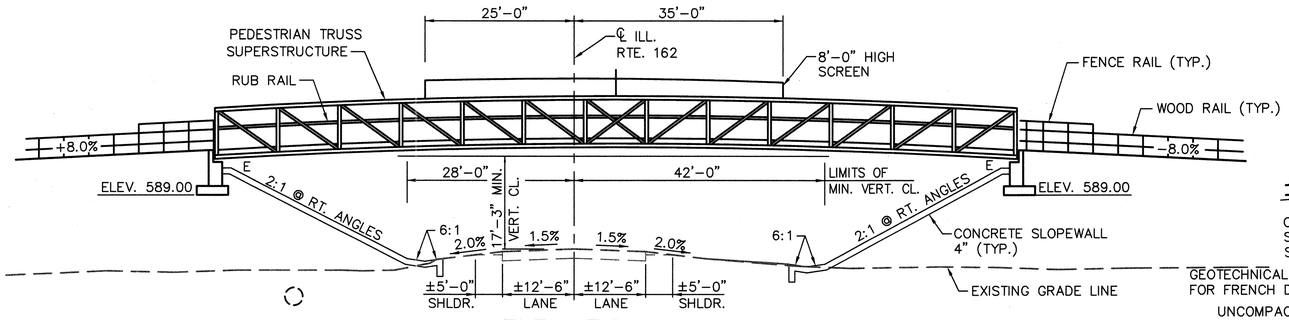

ELEVATION

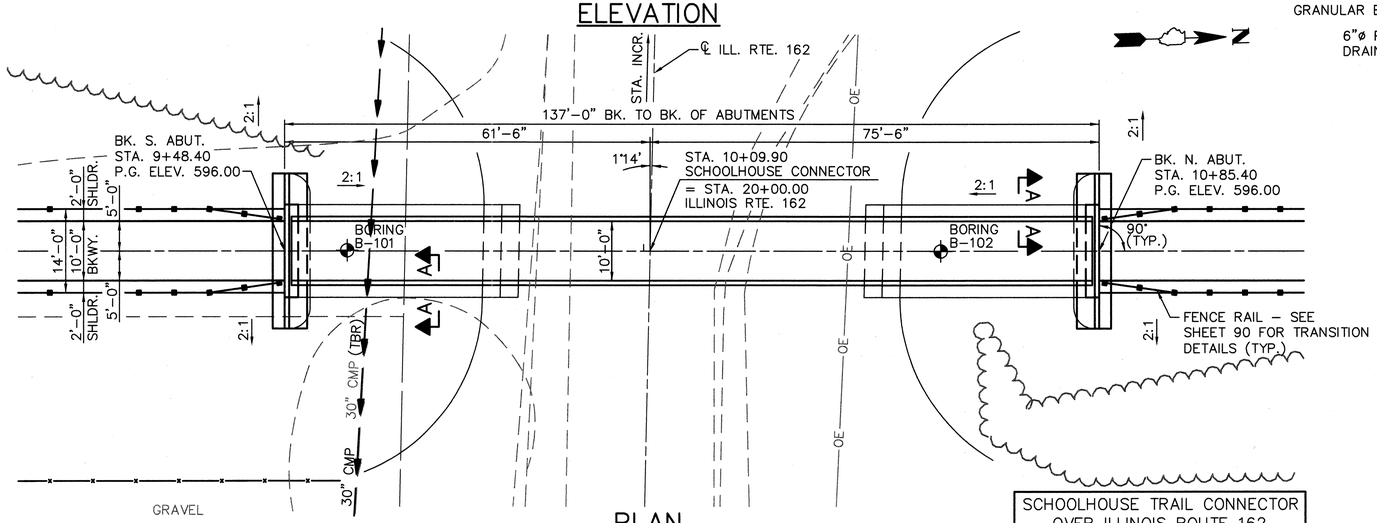

PLAN

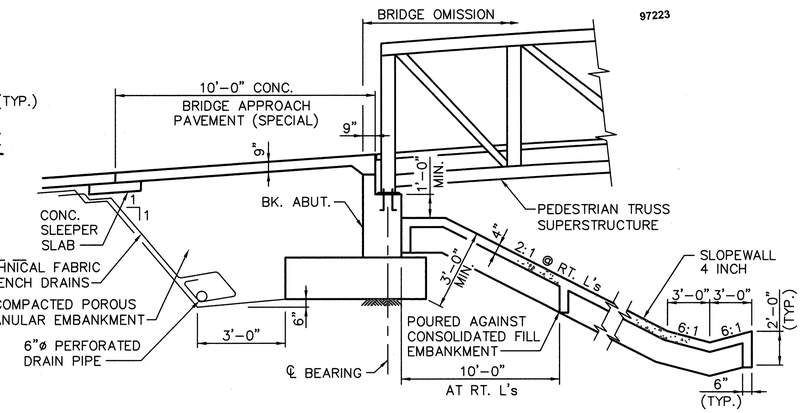

SECTION AT ABUTMENTS

BILL OF MATERIALS

ITEM	UNIT	TOTAL
POROUS GRANULAR EMBANKMENT	CU YD	88
STRUCTURE EXCAVATION	CU YD	108
CONCRETE STRUCTURES	CU YD	35.0
BRIDGE APPROACH PAVEMENT (SPECIAL)	SQ YD	22
REINFORCEMENT BARS, EPOXY COATED	POUND	3400
SLOPE WALL 4 INCH	SQ YD	145
NAME PLATES	EACH	1
PEDESTRIAN TRUSS SUPERSTRUCTURE	SQ FT	1355

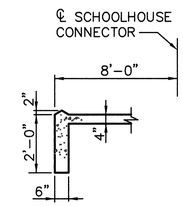

SECTION A-A

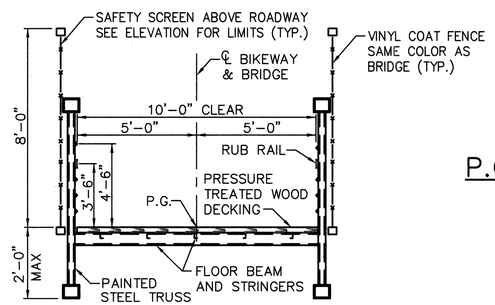

SECTION THROUGH BRIDGE

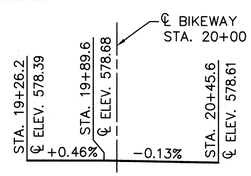

P.G. ILLINOIS ROUTE 162

(LOOKING SOUTH)

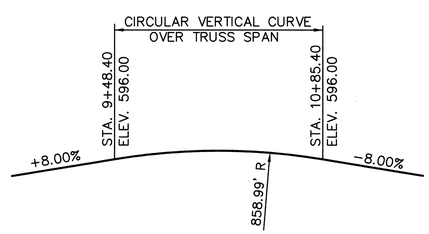

P.G. SCHOOLHOUSE CONNECTOR

SCHOOLHOUSE TRAIL CONNECTOR
OVER ILLINOIS ROUTE 162
BUILT 2004 BY
MADISON COUNTY TRANSIT
SEC. 01-00014-01-BT
STATION 10+09.90
S.N. 060-7000
LOADING 85 PSF &
12,500 POUND VEHICLE

NAME PLATE

(SEE STANDARD 515001)
LOCATED AT SOUTHEAST CORNER OF BRIDGE

DESIGN SPECIFICATIONS

1996 AASHTO WITH 1997, 1998, 1999, 2000 AND 2002 INTERIMS.

AASHTO GUIDE SPECIFICATION FOR DESIGN OF PEDESTRIAN BRIDGES, AUGUST 1997.

LOADING

PEDESTRIAN LIVE LOAD = 85 PSF
VEHICLE LIVE LOAD = 12,500 #

DESIGN STRESSES

f'c = 3,500 PSI
fy = 60 KSI (REINFORCEMENT)
STRUCTURAL STEEL - SEE SPECIAL PROVISIONS
NET ALLOWABLE BEARING PRESSURE = 2,000 PSF

SEISMIC DATA

SEISMIC PERFORMANCE CATEGORY (SPC) = B
ACCELERATION COEFFICIENT (A) = 0.11
SITE COEFFICIENT (S) = 1.5

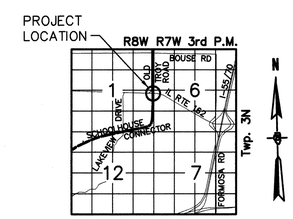

LOCATION SKETCH

NOTES

1. TRUSS MANUFACTURER SHALL CAMBER TRUSS TO PROVIDE MIN. VERTICAL CLEARANCE AS SHOWN WITH ALLOWANCE FOR DEAD LOAD DEFLECTION.
2. SEE SHEET 90 OF 155 FOR FENCE RAIL DETAILS.
3. PAINTED BRIDGE COLOR TO BE DETERMINED BY OWNER
4. THE EMBANKMENT SHALL BE CONSTRUCTED A MINIMUM OF 60 DAYS PRIOR TO CONSTRUCTING ABUTMENTS OR UNTIL THE EMBANKMENT REACHES 90% OF PRIMARY CONSOLIDATION. SETTLEMENT PLATFORMS SHALL BE INSTALLED AT STATION 9+40 AND STATION 10+95. THE COST FOR INSTALLING THE PLATFORMS SHALL BE INCLUDED IN THE COST FOR FURNISHED EXCAVATION.
5. THE SUBSTRUCTURE IS DESIGNED PER AASHTO AND BASED ON ASSUMED TRUSS DEAD LOADS SHOWN BELOW:
   TOTAL SUPERSTRUCTURE DEAD LOAD = 50,000 POUNDS
   TOTAL TRUSS DEAD LOAD AT ABUTMENT = 25,000 POUNDS

APPROVED
FOR STRUCTURAL ADEQUACY ONLY
Robert E. Anderson
ENGINEER OF BRIDGES AND STRUCTURES

PLANS PREPARED BY:
OATES ASSOCIATES, INC.
CONSULTING ENGINEERS

I CERTIFY THE STRUCTURAL DESIGN OF THE ABUTMENTS FOR THE REQUIRED LOADINGS.

LICENSED STRUCTURAL ENGINEER BRUCE P. SCHOPP 081-005158 COLLINSVILLE ILLINOIS STATE OF ILLINOIS

DATE: December 8, 2003
EXPIRES: November 30, 2004

GENERAL PLAN
SCHOOLHOUSE TRAIL CONNECTOR
OVER ILLINOIS ROUTE 162
SECTION 01-00014-01-BT
MADISON COUNTY TRANSIT
STA. 10+09.90
S.N. 060-7000