SECTION	COUNTY	TOTAL SHEETS	SHEET NO.
01-00014-01-BT	MADISON	160	45
DETAILS			

97223

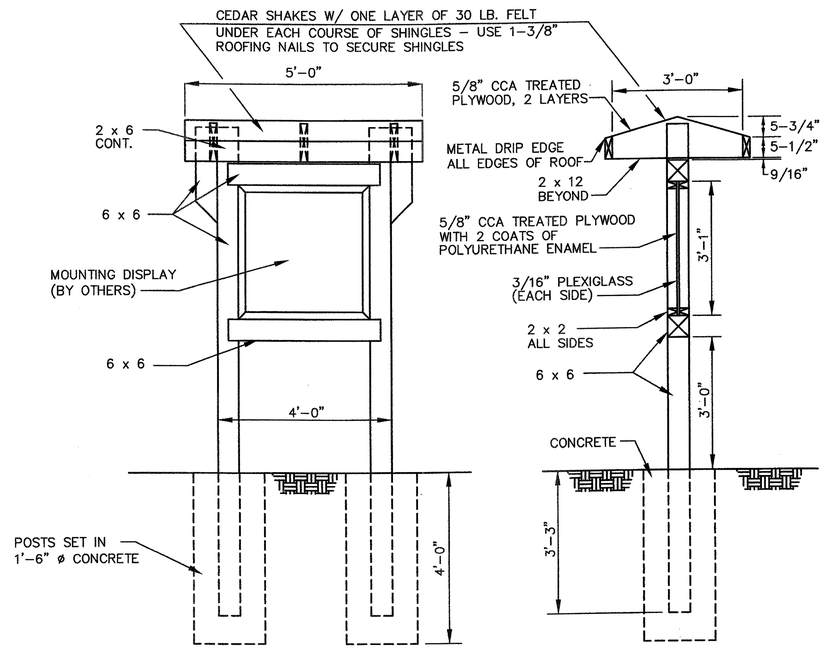

FRONT VIEW

SECTION

NOTE: ALL FASTENERS TO BE STAINLESS STEEL.

INFORMATION KIOSK

NOT TO SCALE

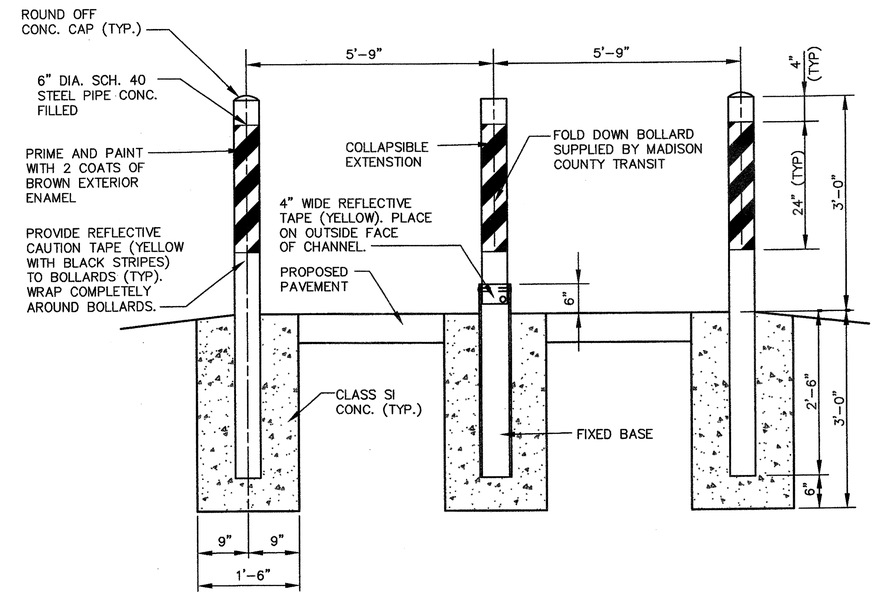

BOLLARD GATE DETAIL

NOT TO SCALE

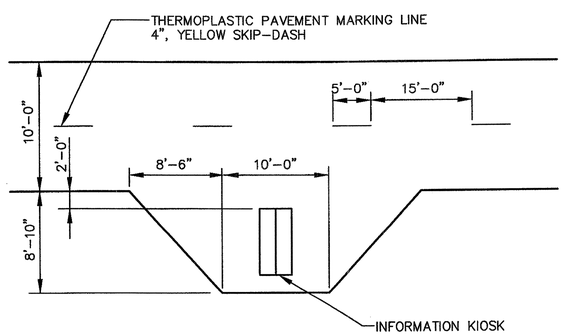

KIOSK TURNOUT AND STRIPING DETAIL

NOT TO SCALE

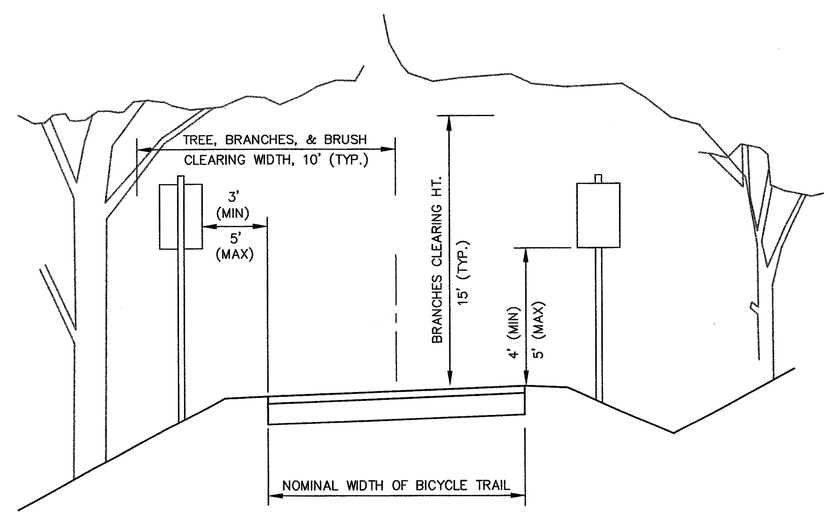

SIGN AND CLEARANCE DETAIL

NOT TO SCALE

FINAL SURVEY	BY	DATE
SURVEYED		
CREATED		
NOTE BOOK TEMPLATE		
AREAS		
NO. AREAS CHECKED		

ORIGINAL SURVEY	BY	DATE
SURVEYED		
PLOTTED		
NOTE BOOK TEMPLATE		
AREAS		
NO. AREAS CHECKED		

H:\IP21040\dwg\140dt02.dwg, 12/04/2003 05:40:55 PM