NOTE:
ALL POSTS, WIRE FABRIC, TOPS AND ACCESORIES TO BE BLACK VINYL COATED 7 TO 10 MILS THICK.

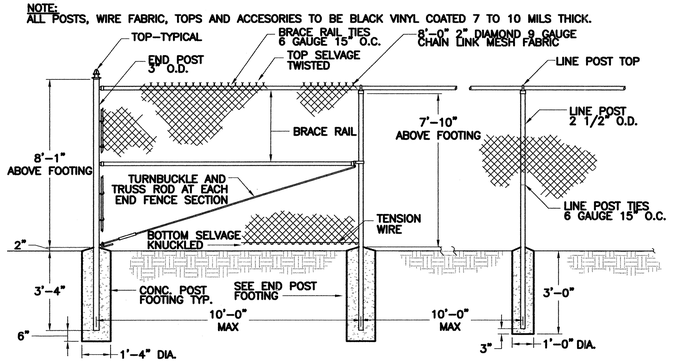

1/7 CHAIN LINK FENCING

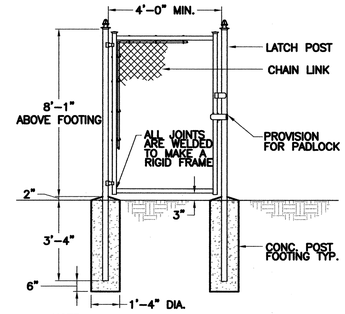

NOTE:
1 ALL POSTS, WIRE FABRIC, TOPS AND ACCESORIES TO BE BLACK VINYL COATED.
2 PLACEMENT OF GATE TO BE LOCATED IN THE FIELD BY OWNER'S REPRESENTATIVE.

2/7 CHAIN LINK FENCING GATE

BASE LEVELING PAD NOTES:

1. THE LEVELING PAD IS TO BE CONSTRUCTED OF CRUSHED STONE OR 2,000 PSI± UNREINFORCED CONCRETE.
2. THE BASE FOUNDATION IS TO BE APPROVED BY THE CONTRACTOR'S SITE GEOTECHNICAL ENGINEER AND THE CITY REPRESENTATIVE PRIOR TO PLACEMENT OF THE LEVELING PAD.
3. SEE SHEET 6 FOR TOP OF WALL AND BOTTOM OF WALL ELEVATIONS.

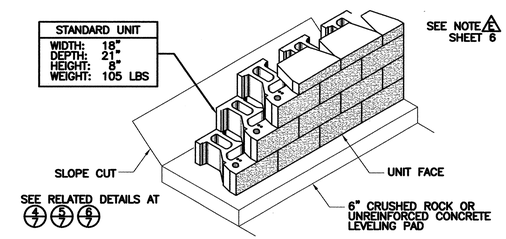

3/7 SEGEMENTAL RETAINING WALL SYSTEM

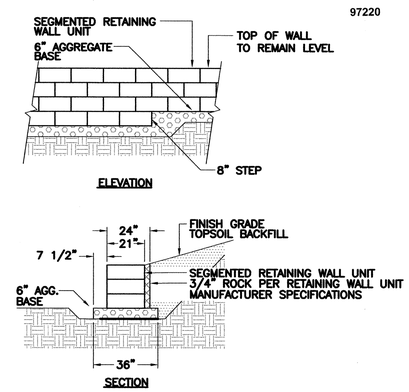

4/7 SEGMENTAL RETAINING WALL LEVELING PAD

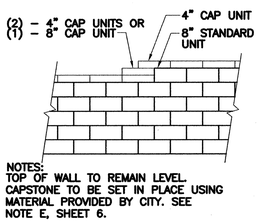

NOTES:
TOP OF WALL TO REMAIN LEVEL.
CAPSTONE TO BE SET IN PLACE USING MATERIAL PROVIDED BY CITY. SEE NOTE E, SHEET 6.

5/7 SEGMENTAL RETAINING WALL STEP UP TOP

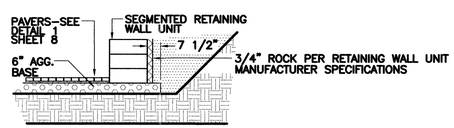

6/7 SEGMENTAL RETAINING WALL WITH PAVER UNITS AT BOTTOM

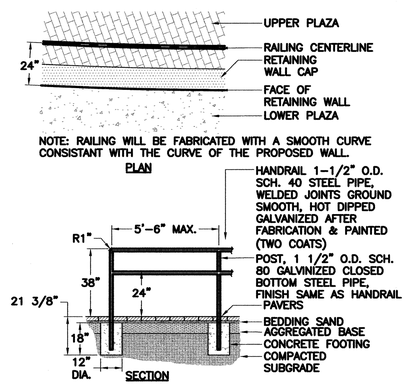

7/7 RAILING AT WALL

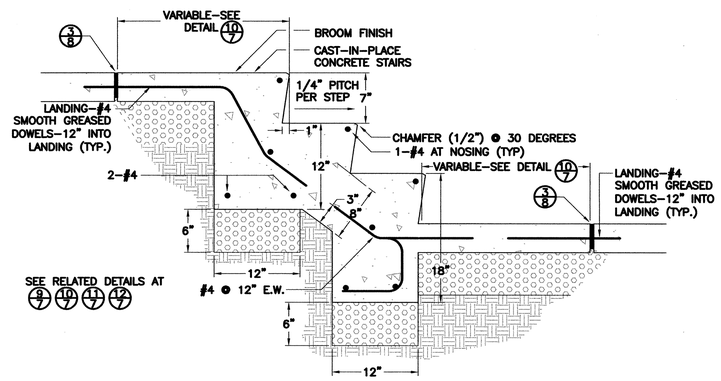

8/7 STAIRWAY–SECTION

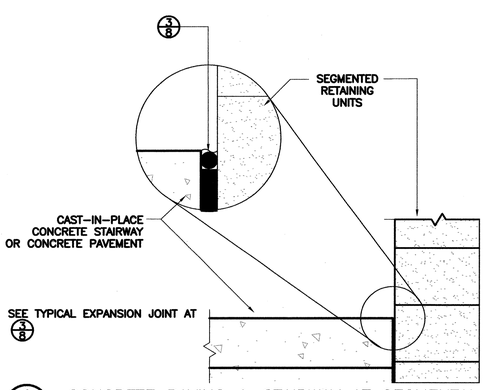

9/7 CONCRETE PAVING & STAIRWAY AT SEGMENTAL RETAINING WALL CONNECTION

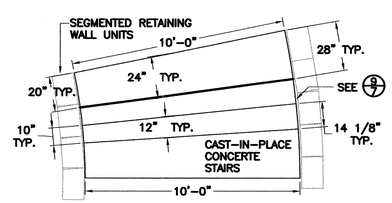

10/7 STAIRWAY–PLAN VIEW

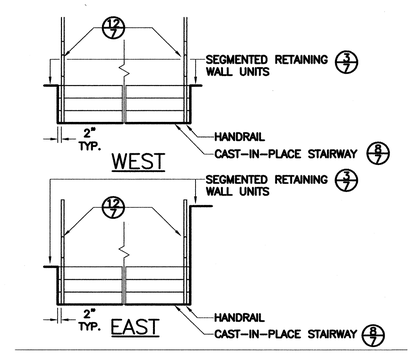

11/7 RAILING AT STAIRWAY–ELEVATION

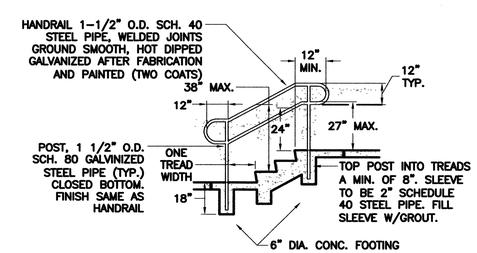

12/7 RAILING AT STAIRWAY–SECTION

97220

REVISIONS	
8/29/03	IDOT COMMENTS

Parsons
400 Woods Mill Road South Suite 330
Chesterfield, Missouri 63017-3427
Phone (314) 434-2900
Fax (314) 576-2702

Sheppard Morgan & Schwaab, Inc.
CONSULTING ENGINEERS & LAND SURVEYORS
215 Market Street
Alton, Illinois 62002
618/462-9755
10 Central Industrial Dr
Wood River, Illinois 62095
Granite City, IL 62040
618/877-8700

SMS ENGINEERS

CITY OF ALTON
PIASA PARK–PHASE 1
SITE AMENITY DETAILS

DWG. NO.	H-35
	.DWG ACAD
CDGD FILE	
REF. BK.	PG.
JOB NO.	
DSN. BY:	DKB
DWN. BY:	AJL
CHK. BY:	DKB
DATE:	3-28-02
SCALE:	AS SHOWN
SHEET	7 OF 8

S:\Land Projects\piasa park\dwg\Sheet 7.dwg, 12/29/2003 3:21:08 PM, hetpetters, 1:1