RTE.	SECTION	COUNTY	TOTAL SHEETS	SHEET NO.
TR 248	00-05120-00-BR	FAYETTE	14	10
FED. ROAD DIST. NO. 7	ILLINOIS	FED. AID PROJECT NO.		

95389

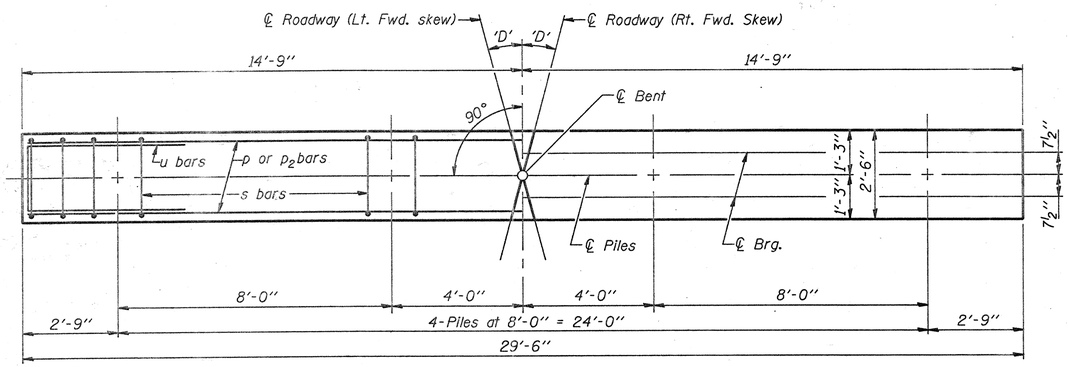

PLAN

('D'= Designated Skew Angle)

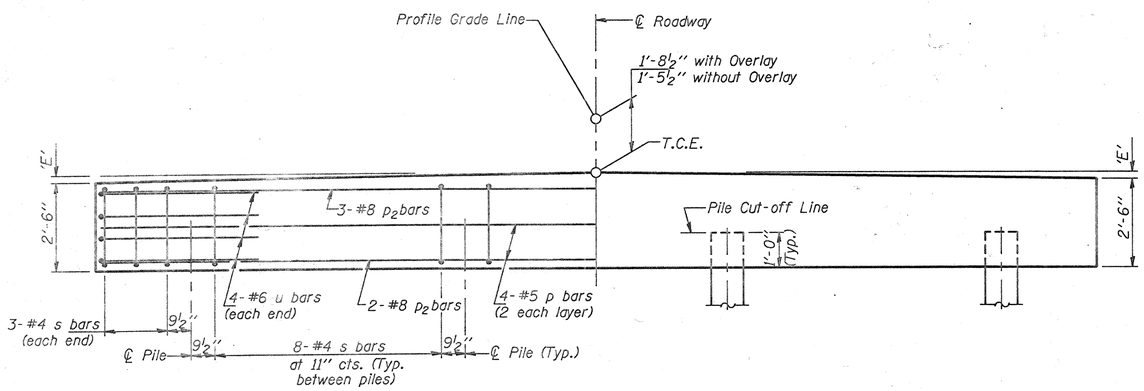

ELEVATION

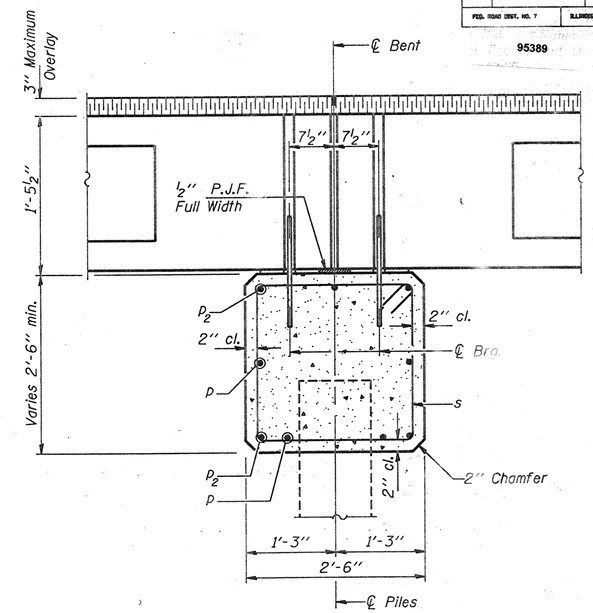

SECTION THRU PIER

(At Right Angles)

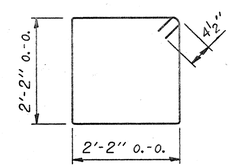

Bar s

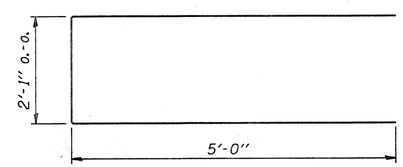

Bar u

BILL OF MATERIAL FOR ONE PIER

Bar	No.	Size	Length	Shape
p	4	#5	29'-2"	
p_2	5	#8	29'-2"	
s	30	#4	9'-5"	
u	8	#6	12'-1"	
Concrete Structures			7.1	Cu. Yds.
Reinforcement Bars			850	Lbs.

DIMENSION 'E'

GRADE	'D'=25°		'D'=30°	
	UPGRADE END	DOWNGRADE END	UPGRADE END	DOWNGRADE END
0%	2½"	2½"	2⅜"	2⅜"
Over 0% to 1%	2⅛"	2⅞"	2"	2⅞"
Over 1% to 2%	1⅜"	3⅝"	1"	3¾"
Over 2% to 3%	⅝"	4⅜"	⅛"	4⅝"
Over 3% to 4%	0"	5⅛"	—	—

MAXIMUM PILE LOADS

SPAN	TONS
25'	33
30'	37
35'	41
40'	44

Longer of Either Span Supported by Pier.

DESIGN STRESSES

f'c = 3,500 psi
fy = 60,000 psi

NOTE

Reinforcement bars shall conform to A.A.S.H.T.O. M-31, M-42 or M-53, Grade 60.

Illinois Department of Transportation

PASSED November 1, 1995
Engineer of Bridge Design

APPROVED November 1, 1995
Engineer of Bridges and Structures

ISSUED 1-1-81

P.P.C. DECK BEAMS PILE BENT PIER

24' RDWY. | 17" BMS. | 'D'=25° OR 30°

STANDARD CP-2417-30