ROUTE	SECTION	COUNTY	TOT. SHTS.	SHT.
C.H. 8	91-00140-00-BR	JEFFERSON	11	7
JEFFERSON COUNTY ROAD DISTRICT				

95387

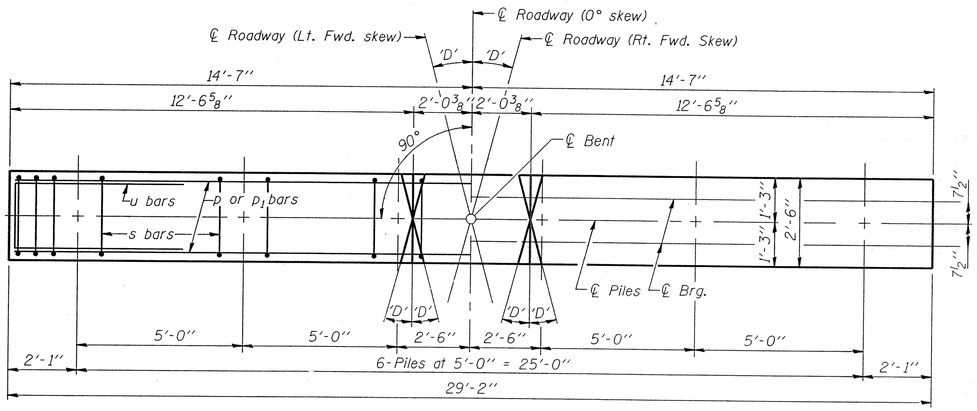

PLAN

('D'= Designated Skew Angle)

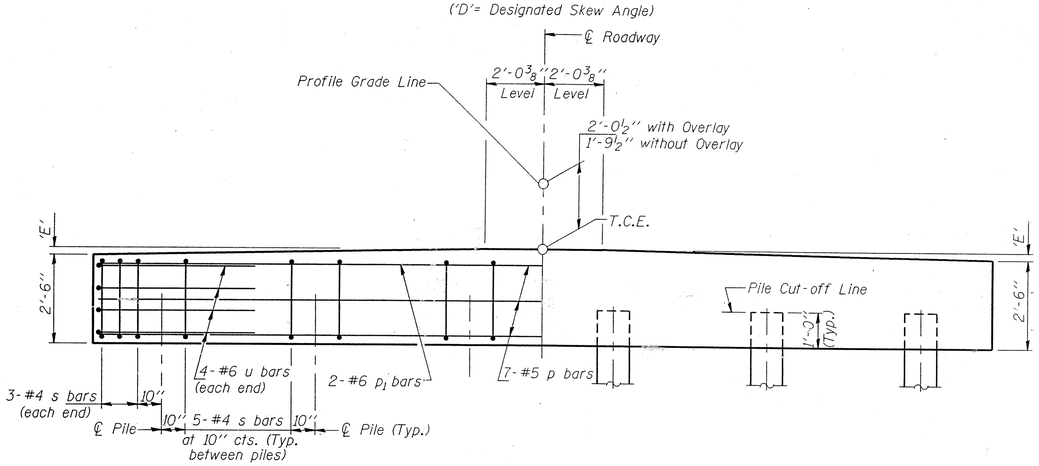

ELEVATION

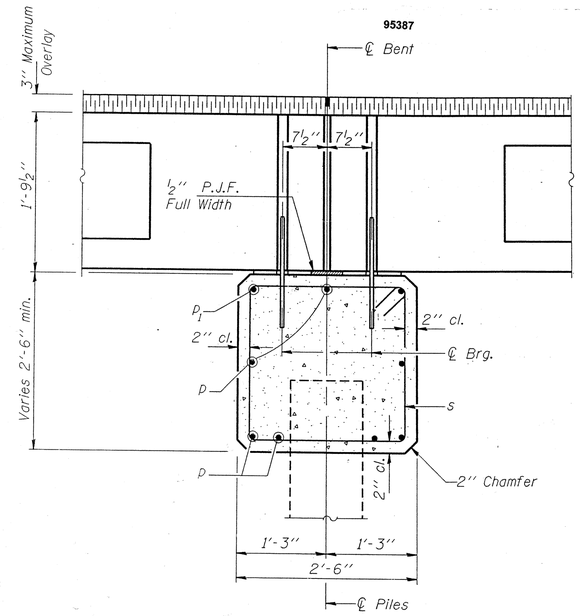

SECTION THRU PIER

(At Right Angles)

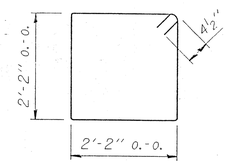

Bar s

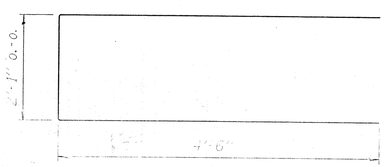

Bar u

BILL OF MATERIAL FOR ONE PIER

Bar	No.	Size	Length	Shape
p	7	#5	28'-10''	
p1	2	#6	28'-10''	
s	31	#4	9'-5''	
u	8	#6	11'-1''	
Concrete Structures			7.1	Cu. Yds.
Reinforcement Bars			630	Lbs.

DIMENSION 'E'

GRADE	'D'=0°		'D'=5°		'D'=10°	
	UPGRADE END	DOWNGRADE END	UPGRADE END	DOWNGRADE END	UPGRADE END	DOWNGRADE END
0%	2 3/8''	2 3/8''	2 3/8''	2 3/8''	2 3/8''	2 3/8''
Over 0% to 1%	2 3/8''	2 3/8''	2 1/4''	2 3/8''	2 1/8''	2 1/2''
Over 1% to 2%	2 3/8''	2 3/8''	2 1/8''	2 1/2''	1 7/8''	2 3/4''
Over 2% to 3%	2 3/8''	2 3/8''	2''	2 5/8''	1 5/8''	3''
Over 3% to 4%	2 3/8''	2 3/8''	1 7/8''	2 3/4''	1 3/8''	3 1/4''

MAXIMUM PILE LOADS

SPAN	TONS
30'	27
35'	30
40'	36
50'	42

Longer of Either Span Supported by Pier.

DESIGN STRESSES

f'c = 3,500 psi
fy = 60,000 psi

NOTE

Reinforcement bars shall conform to A.A.S.H.T.O. M-31, M-42 or M-53, Grade 60.

Illinois Department of Transportation

PASSED November 1, 1995
Engineer of Bridge Design

APPROVED November 1, 1995
Engineer of Bridges and Structures

ISSUED 1-1-81

P.P.C. DECK BEAMS
PILE BENT PIER

28' RDWY. | 21'' BMS. | 'D'=0°, 5° OR 10°

STANDARD CP-2821-10