ROUTE	SECTION	COUNTY	TOT. SHTS.	SHT.
C.H. 9	91-00140-00-BR	JEFFERSON	11	6
JEFFERSON COUNTY ROAD DISTRICT				

95387

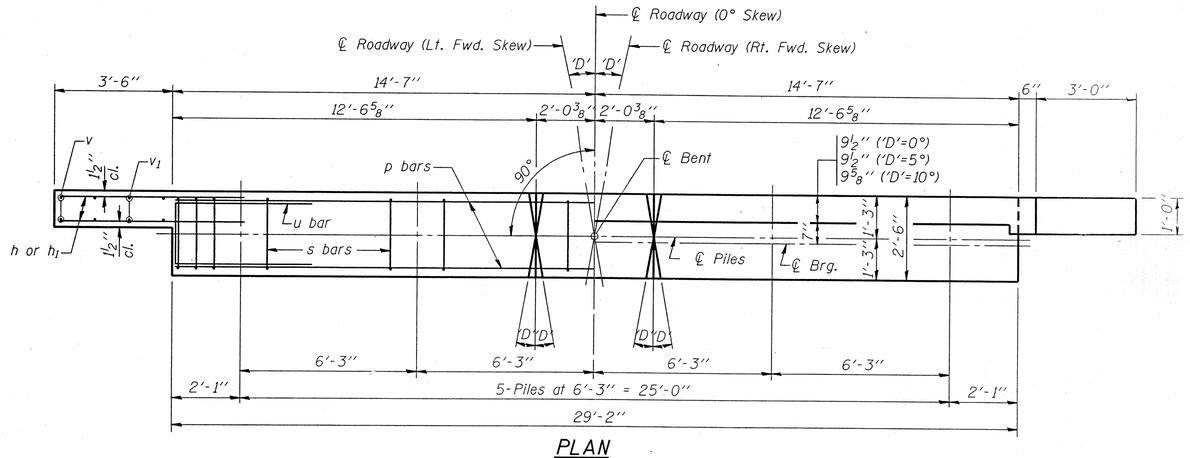

PLAN

('D'=Designated Skew Angle)

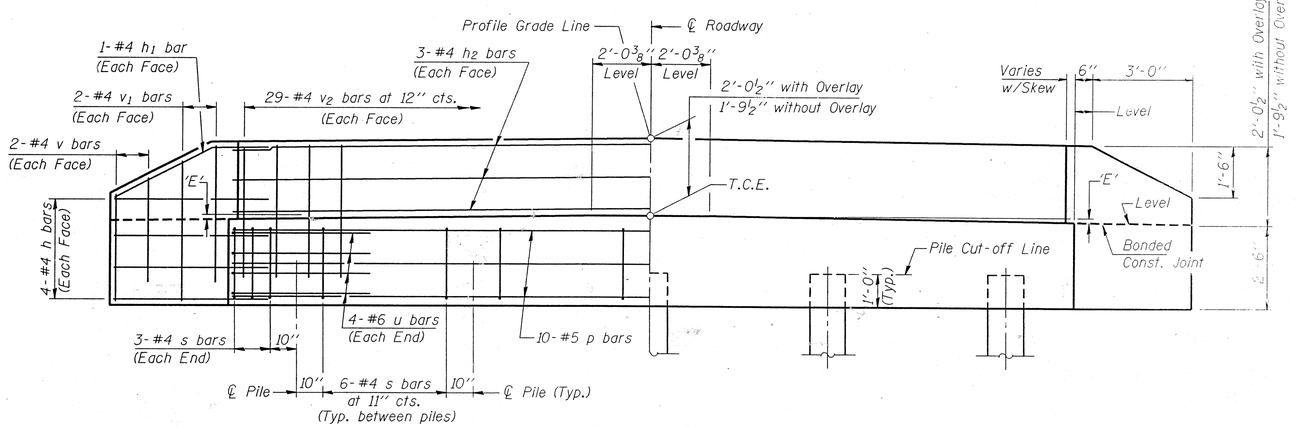

ELEVATION

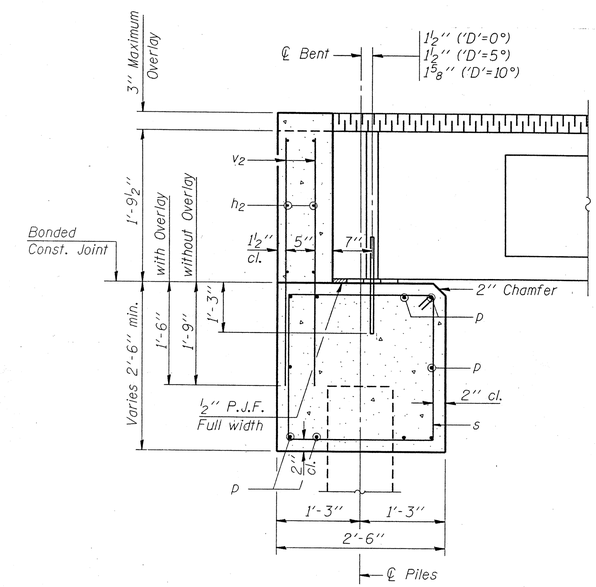

SECTION THRU ABUTMENT

(At Right Angles)

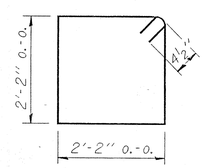

BAR s

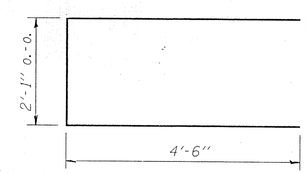

BAR u

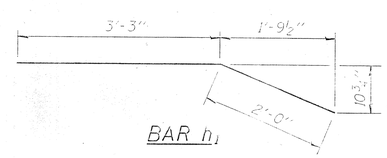

BAR h1

BILL OF MATERIAL FOR ONE ABUTMENT

Bar	No.	Size	Length	Shape
h	16	#4	5'-0"	
h1	4	#4	5'-3"	
h2	6	#4	28'-10"	
p	10	#5	28'-10"	
s	30	#4	9'-5"	
u	8	#6	11'-1"	
v	8	#4	2'-8"	
v1	8	#4	3'-8"	
v2	58	#4	3'-5"	
Concrete Structures			9.9 Cu. Yds.	
Reinforcement Bars			970 Lbs.	

DIMENSION 'E'

GRADE	'D'=0°		'D'=5°		'D'=10°	
	UPGRADE END	DOWNGRADE END	UPGRADE END	DOWNGRADE END	UPGRADE END	DOWNGRADE END
0%	2 3/8"	2 3/8"	2 3/8"	2 3/8"	2 3/8"	2 3/8"
Over 0% to 1%	2 3/8"	2 3/8"	2 1/4"	2 3/8"	2 1/8"	2 1/2"
Over 1% to 2%	2 3/8"	2 3/8"	2 1/8"	2 1/2"	1 7/8"	2 3/4"
Over 2% to 3%	2 3/8"	2 3/8"	2"	2 5/8"	1 5/8"	3"
Over 3% to 4%	2 3/8"	2 3/8"	1 7/8"	2 3/4"	1 3/8"	3 1/4"

NOTES

1. The Backwall and the portion of the Wingwalls above the bonded construction joint shall be poured without the deck beam.
2. Reinforcement bars shall conform to A.A.S.H.T.O. M-31, M-42 or M-53, Grade 60.

MAXIMUM PILE LOADS

SPAN	TONS
30'	25
35'	27
40'	29
50'	33

DESIGN STRESSES

f'c = 3,500 psi
fy = 60,000 psi

Illinois Department of Transportation

PASSED November 1, 1995
Engineer of Bridge Design

APPROVED November 1, 1995
Engineer of Bridges and Structures

ISSUED 1-1-81

P.P.C. DECK BEAMS
PILE BENT ABUTMENT

28' RDWY. | 21" BMS. | 'D'=0°, 5° OR 10°

STANDARD CA-2821-10