ORIGINAL SURVEY		BY	DATE
NOTE BOOK	SURVEYED		
	PLOTTED		
	TEMPLATE		
	AREAS		
NO.	AREAS CHECKED		

FINAL SURVEY		BY	DATE
NOTE BOOK	SURVEYED		
	PLOTTED		
	TEMPLATE		
	AREAS		
NO.	AREAS CHECKED		

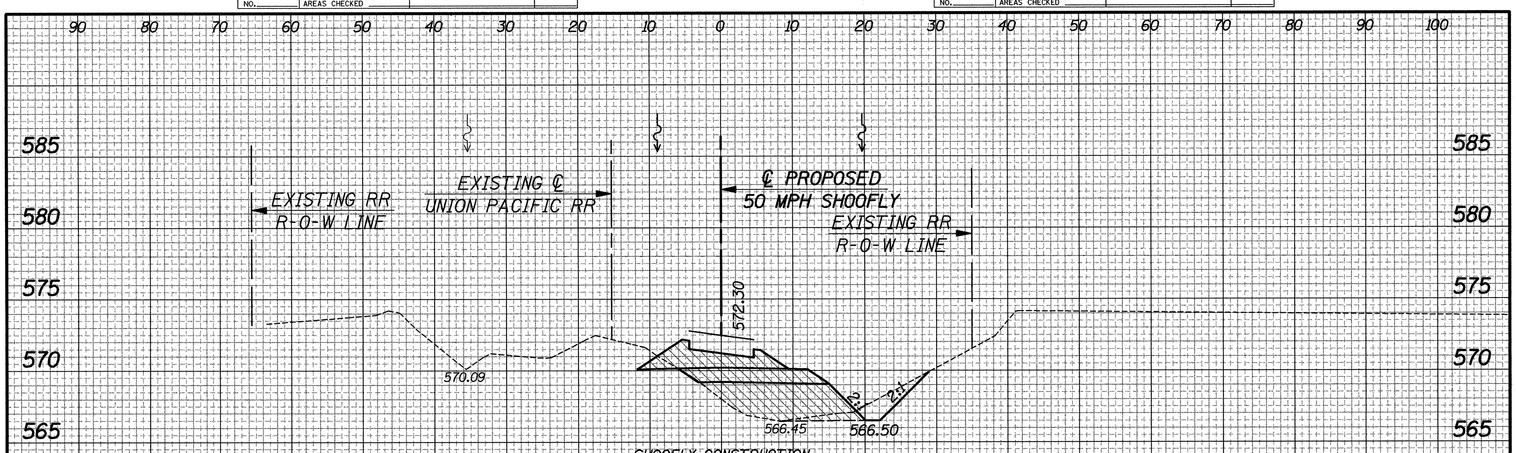

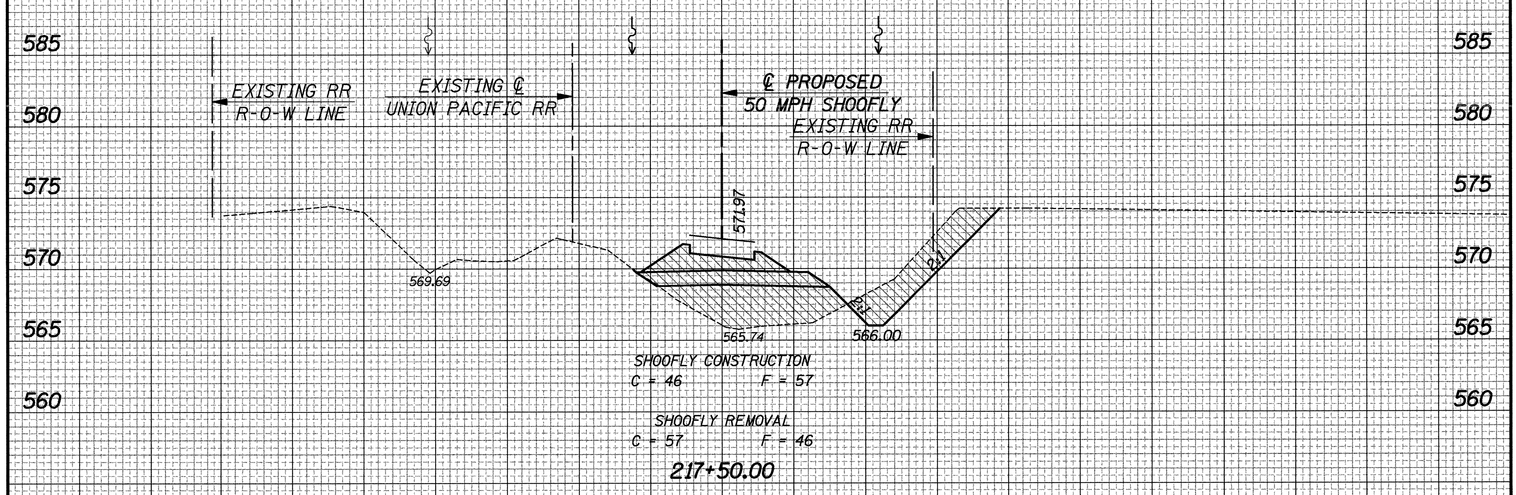

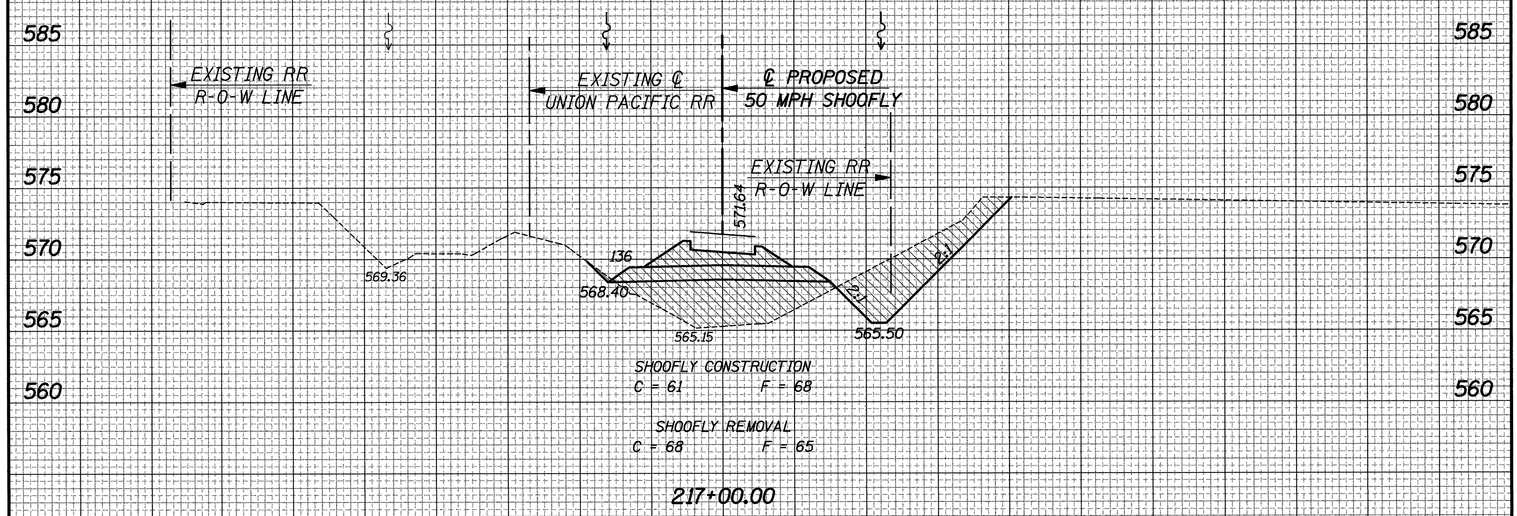

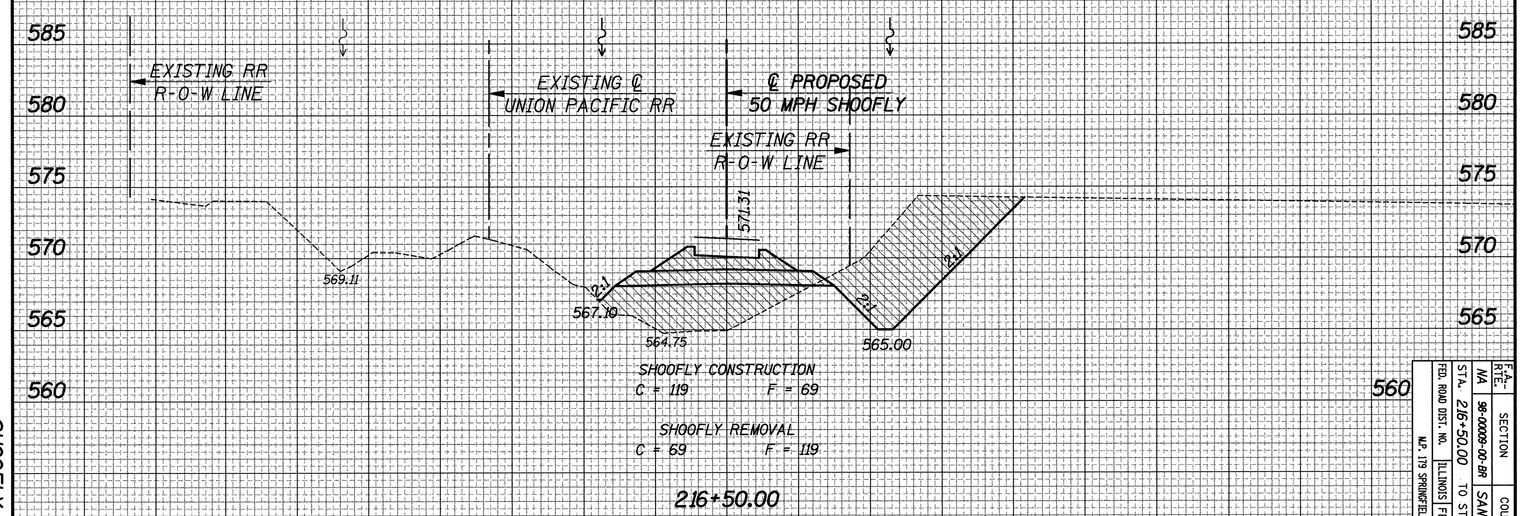

F.A. RTE.	SECTION	COUNTY	TOTAL SHEETS	SHEET NO.
NA	98-0009-00-BR	SANGAMON	107	105
STA. 216+50.00 TO STA. 218+00.00				
FED. ROAD DIST. NO. ILLINOIS FED. AID PROJECT				
MP. 179 SPRINGFIELD SUBDIVISION				

93346

SHOOFLY X-SECTIONS