C.H.	SECTION	COUNTY	TOTAL SHEETS	SHEET NO.
NA	98-00009-00-BR	SANGAMON	107	54
FED. ROAD DIST. NO.	ILLINOIS	FED. AID PROJECT		
M.P. 179 SPRINGFIELD SUBDIVISION				
SHEET 17 OF 27				

93346

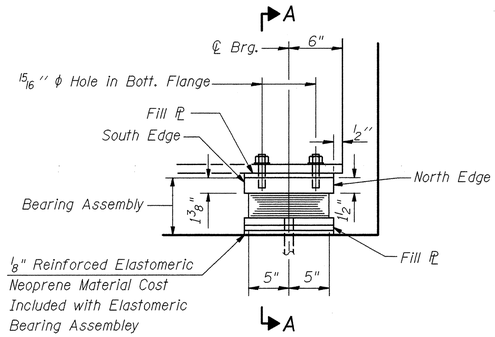

ELEVATION AT NORTH ABUTMENT

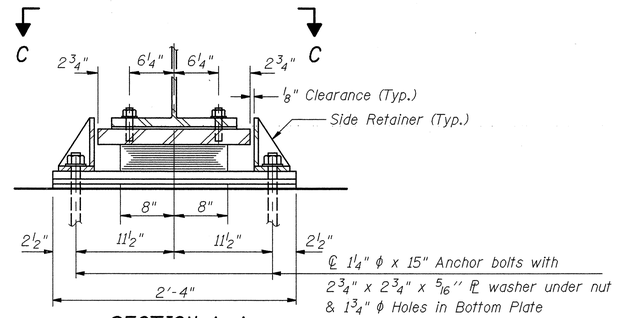

SECTION A-A

ELASTOMERIC BEARING ASSEMBLY, TYPE 1 (Special)

Notes: Anchor bolts at fixed bearings may be built into the masonry.
See sheets 5 & 7 of 27 for Anchor Bolt installation.

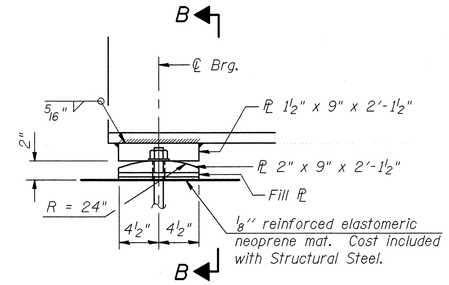

ELEVATION AT SOUTH ABUTMENT

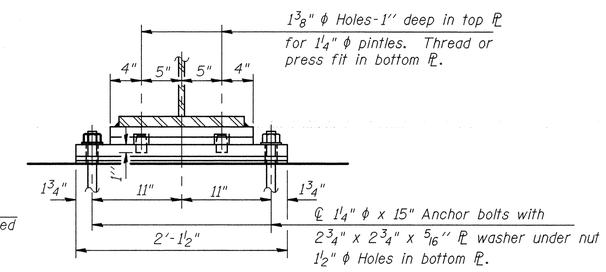

SECTION B-B

FIXED BEARING

(6 Req'd)

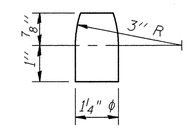

PINTLE

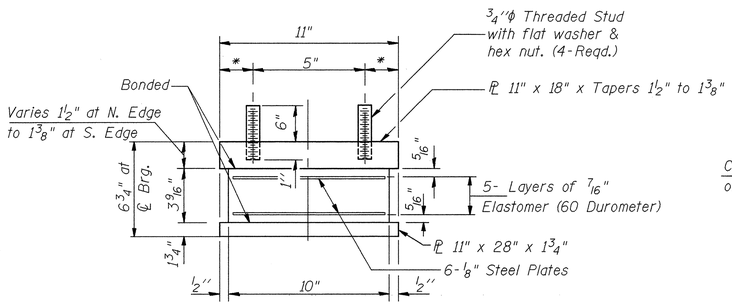

BEARING ASSEMBLY

* See Section C-C

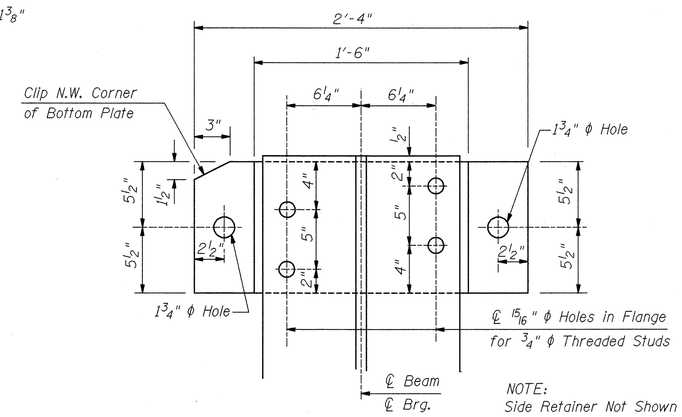

NOTE:
Side Retainer Not Shown

SECTION C-C

BILL OF MATERIAL

Item	Unit	Total
Elastomeric Bearing Assembly , Type I (Special)	Each	6

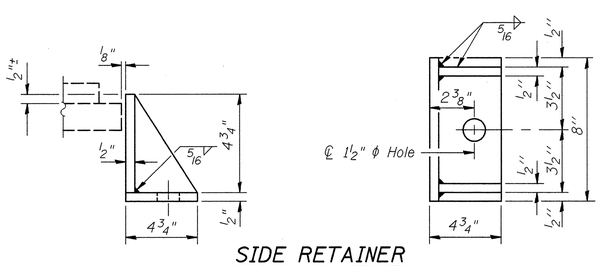

SIDE RETAINER

Equivalent rolled angle with stiffeners will be allowed in lieu of welded plates. Weight included with Structural Steel.

FILL PLATES	
BEAM	HEIGHT
2	1/2"
3	7/8"
4	1 1/8"
5	1"
6	3/4"

BEARING DETAILS
UNION PACIFIC RAILROAD
OVER MEREDITH DRIVE
SANGAMON COUNTY
SEC. 98-00009-00-BR
STA. 9437+93.49
STRUCT. NO. 084-9946

ie consultants
6420 South Sixth Street
Springfield, Illinois 62707
Tel. (217) 529-8027
Fax (217) 529-4543
ieSpringfield@ie-consultants.com
www.ie-consultants.com

DESIGNED BY:	CHECKED BY:	DRAWN BY:	DATE:
G.B.M.	D.R.B.	J.P.H.	1-3-03

FILE: 00S29RGDT.DGN 11/07/03 10:44:34 AM