C.H.	SECTION	COUNTY	TOTAL SHEETS	SHEET NO.
NA	98-00009-00-BR	SANGAMON	107	53
FED. ROAD DIST. NO.	ILLINOIS	FED. AID PROJECT		
M.P. 179 SPRINGFIELD SUBDIVISION				
SHEET 16 OF 27				

93346

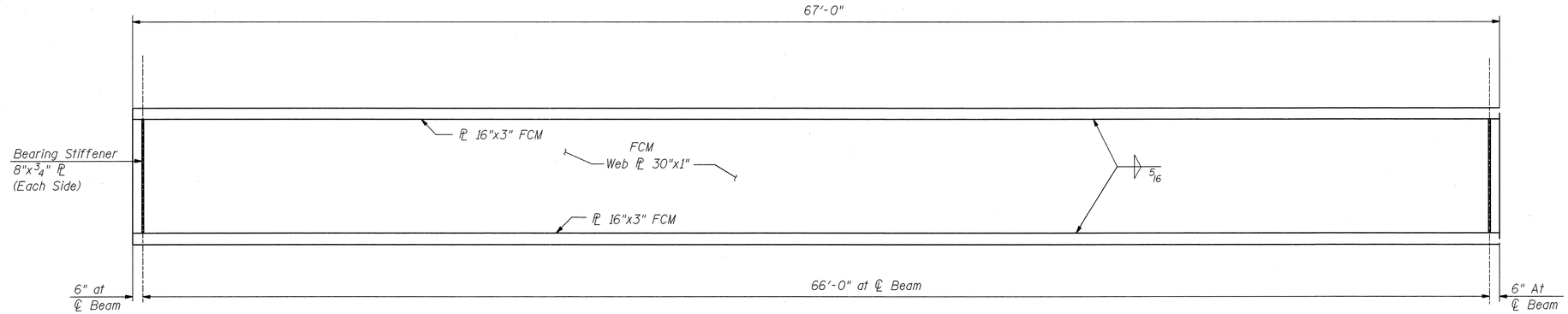

BEAM ELEVATION

FCM = Fracture Critical Member. Shall conform to the Supplemental requirements for Notch Toughness Zone 2.

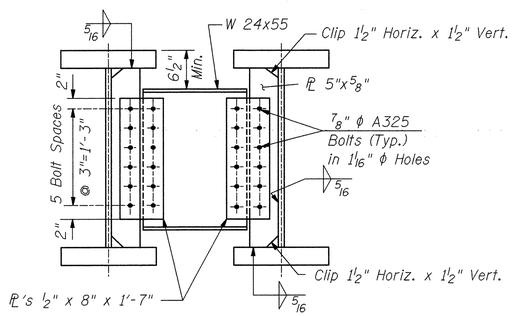

INTERMEDIATE DIAPHRAGM DETAIL

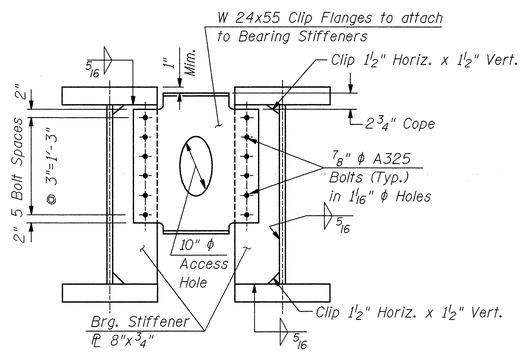

END DIAPHRAGM DETAIL-D2

INTERIOR GIRDER MOMENT TABLE		
		0.5 Sp. #1
Is	(in⁴)	28458
Ss	(in³)	1581
DL	(k/ft.)	1.91
MDL	('k)	1040
ML (E-80)	('k)	1029
M (Imp)	('k)	323
fsDL	(k.s.i.)	7.89
fs[ML+M(Imp)]	(k.s.i.)	10.26
fs (Total)	(k.s.i.)	18.15
VR	(k)	92.4

INTERIOR GIRDER REACTION TABLE		
		Abutment
RDL	(k)	63.1
RL	(k)	70.3
Imp.	(k)	22.1
R (Total)	(k)	155.5

Is and Ss are the moment of inertia and section modulus of the steel section used in computing fs DL non-comp.

VR is maximum LL+ Impact shear range in span.

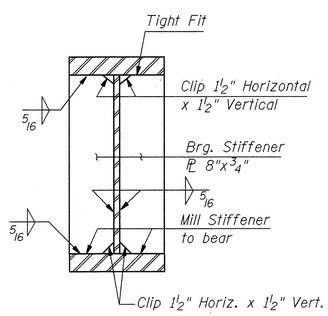

BEARING STIFFENER DETAIL-D1

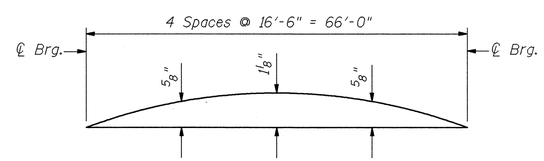

CAMBER DIAGRAM

NOTE:
All Steel is Grade 36 unless otherwise noted.

STEEL DETAILS
UNION PACIFIC RAILROAD
OVER MEREDITH DRIVE
SANGAMON COUNTY
SEC. 98-00009-00-BR
STA. 9437+93.49
STRUCT. NO. 084-9946

ie consultants
6420 South Sixth Street
Springfield, Illinois 62707
Tel. (217) 529-8027
Fax (217) 529-4543
ieSpringfield@ie-consultants.com
www.ie-consultants.com

DESIGNED BY:	CHECKED BY:	DRAWN BY:	DATE:
G.B.M.	D.R.B.	J.P.H.	1-3-03

FILE:0062STDT.DGN 11/07/03 10:44:13 AM