C.H.	SECTION	COUNTY	TOTAL SHEETS	SHEET NO.
NA	98-00009-00-BR	SANGAMON	107	51
FED. ROAD DIST. NO.	ILLINOIS	FED. AID PROJECT		
M.P. 179 SPRINGFIELD SUBDIVISION				
SHEET 14 OF 27				

93346

*Order a bars full length.
Cut to fit Skew and place
remainder in Bottom of Deck

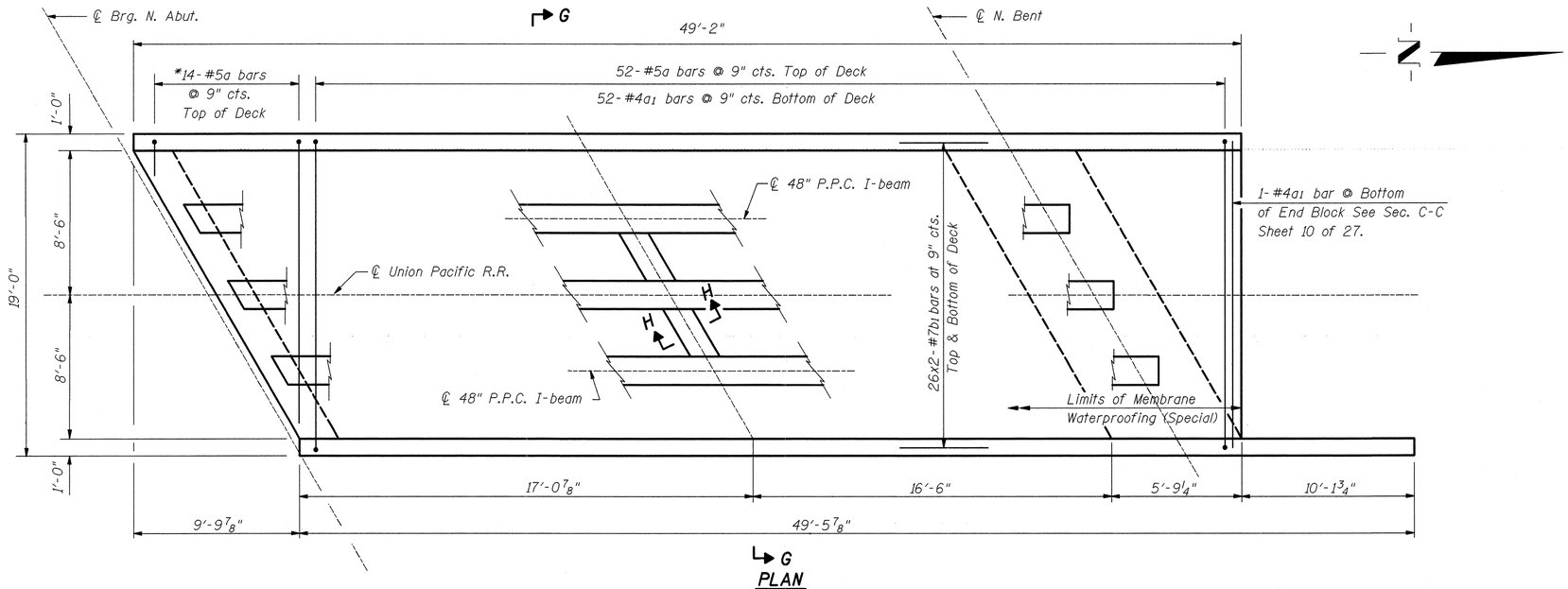

PLAN

See Sheets 20 & 21 of 27 for Curb Reinforcement Detail

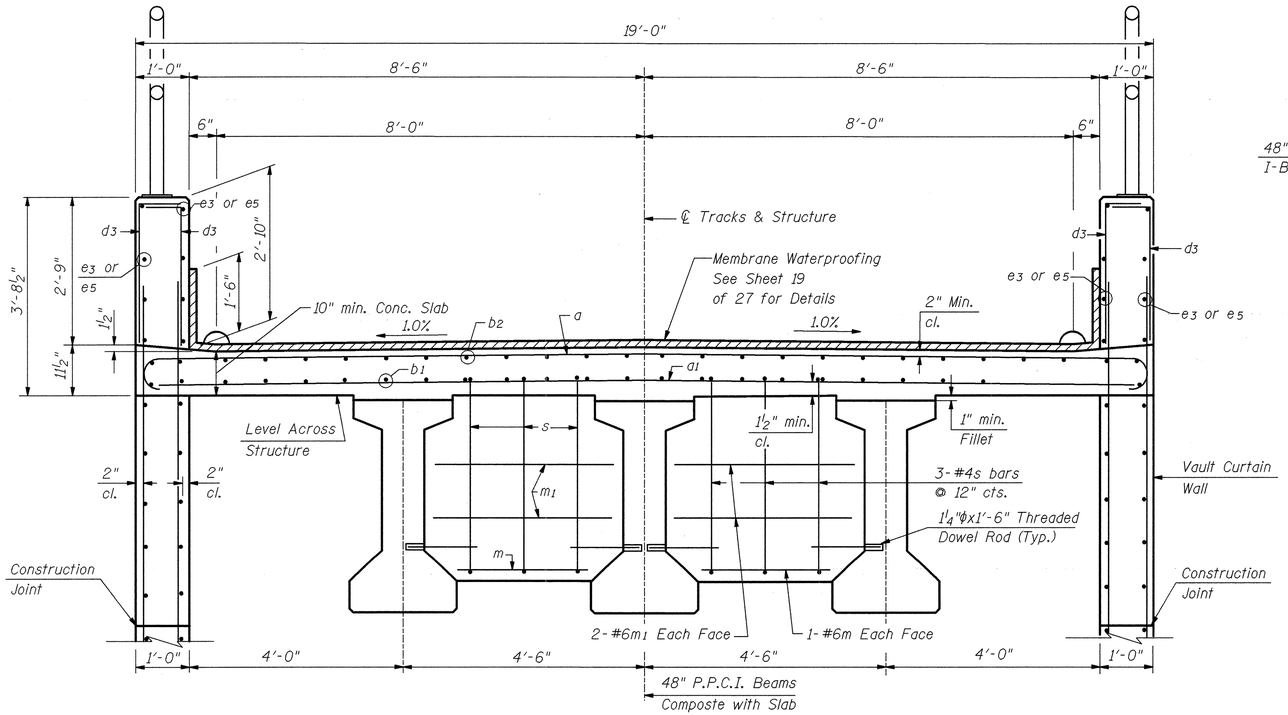

SECTION G-G

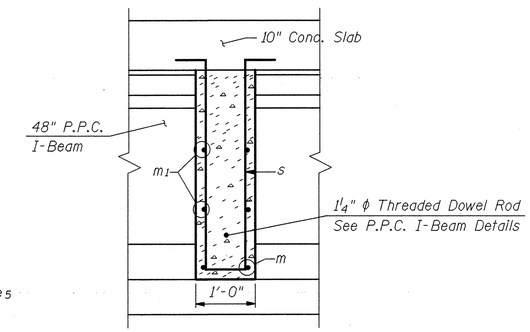

SECTION H-H

BILL OF MATERIAL

	Bar	No.	Size	Length	Shape
	a	61	#5	19'-8"	
	a1	46	#4	18'-6"	
	b1	104	#7	26'-2"	
4	d4	27	#8	9'-0"	
2	h	4	#5	21'-6"	
2	h2	4	#7	7'-0"	
2	h3	4	#7	7'-0"	
3	h7	20	#7	38'-0"	
3	h8	10	#7	15'-0"	
3	h9	7	#8	13'-0"	
1	m	4	#6	2'-6"	
1	m1	8	#6	3'-6"	
1	m2	8	#6	4'-0"	
	s	6	#4	8'-8"	
4	s6	70	#4	2'-0"	
4	s7	18	#8	14'-4"	
3	v4	160	#7	7'-0"	
3	v7	22	#7	11'-0"	

ITEM	UNIT	QUANTITY
Reinforcement Bars	Pound	14,050
Concrete Superstructure	Cu. Yd.	69.0
Membrane Waterproofing (Special)	Sq. Ft.	974

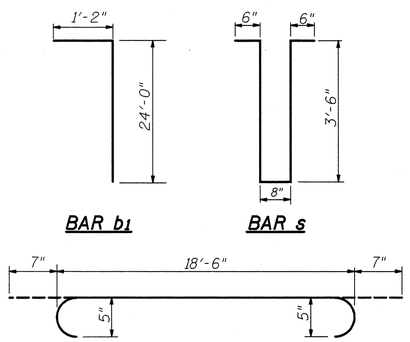

BAR b1

BAR s

BAR a

1- For Location See Sheet 12 of 27.
2- For Location See Sheet 7 of 27.
3- For Location See Sheet 8 of 27.
4- For Location See Sheet 10 of 27.

See Sheet 20 of 27
For e3 & e5 bars.

NORTH VAULT DECK PLAN
UNION PACIFIC RAILROAD
OVER MEREDITH DRIVE
SANGAMON COUNTY
SEC. 98-00009-00-BR
STA. 9437+93.49
STRUCT. NO. 084-9946

ie consultants
6420 South Sixth Street
Springfield, Illinois 62707
Tel. (217) 529-8027
Fax (217) 529-4543
ieSpringfield@ie-consultants.com
www.ie-consultants.com

DESIGNED BY:	CHECKED BY:	DRAWN BY:	DATE:
G.B.M.	D.R.B.	J.P.H.	1-3-03

FILE: 00620KOT1.DGN 11/07/03 10:43:23 AM