C.H.	SECTION	COUNTY	TOTAL SHEETS	SHEET NO.
NA	98-00009-00-BR	SANGAMON	107	50
FED. ROAD DIST. NO.	ILLINOIS	FED. AID PROJECT		
M.P. 179 SPRINGFIELD SUBDIVISION				
SHEET 13 OF 27				

93346

* Order a bars full length.
Cut to fit Skew and place remainder in bottom deck.

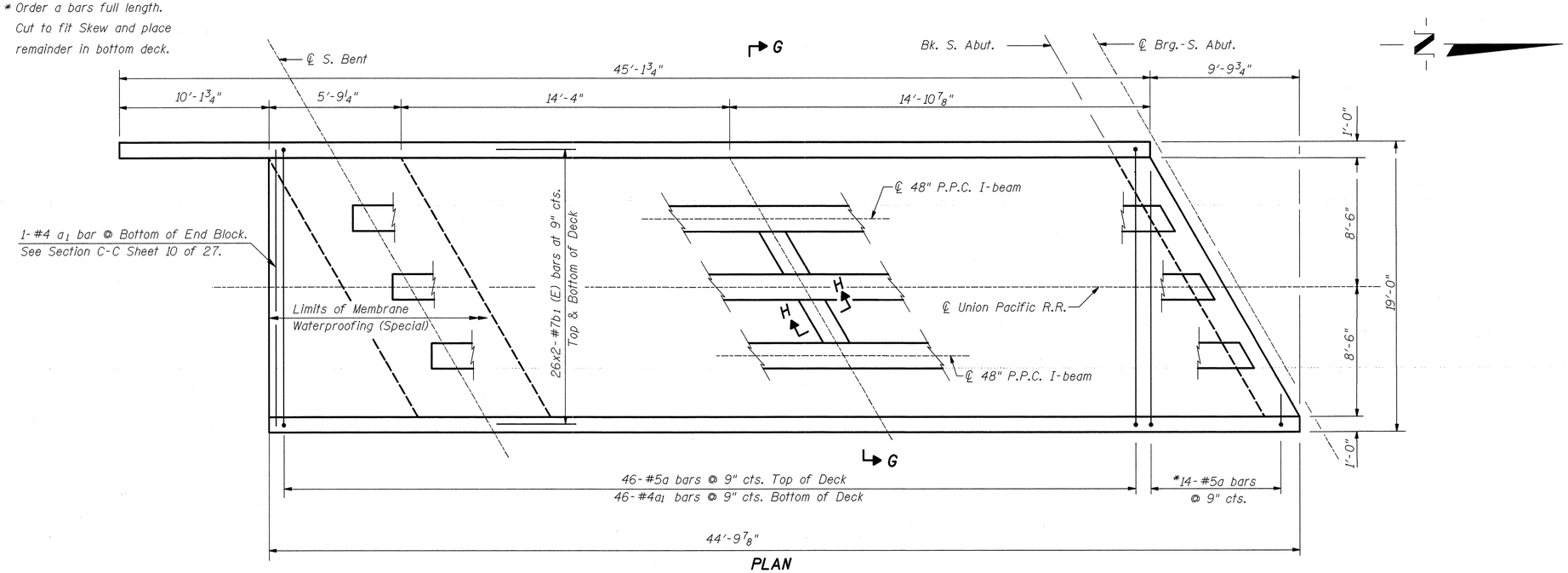

PLAN

BILL OF MATERIAL

	Bar	No.	Size	Length	Shape
	a	61	#5	19'-8"	
	a1	46	#4	18'-6"	
	b1	104	#7	26'-2"	
④	d4	27	#8	9'-0"	
②	h	4	#5	21'-6"	
②	h2	4	#7	7'-0"	
②	h3	4	#7	7'-0"	
③	h8	10	#5	13'-0"	
③	h9	7	#8	15'-0"	
③	h11	20	#7	34'-6"	
①	m	8	#6	2'-6"	
①	m1	16	#6	3'-6"	
①	m2	8	#6	4'-0"	
④	s	6	#4	8'-8"	
④	s6	70	#4	2'-0"	
④	s7	18	#8	14'-4"	
③	v4	144	#7	7'-0"	
③	v7	22	#7	11'-0"	

ITEM	UNIT	QUANTITY
Reinforcement Bars	Pound	13,600
Concrete Superstructure	Cu. Yd.	65.4
Membrane Waterproofing (Special)	Sq. Ft.	879

① - For Location See Sheet 12 of 27.
② - For Location See Sheet 5 of 27.
③ - For Location See Sheet 6 of 27.
④ - For Location See Sheet 10 of 27.

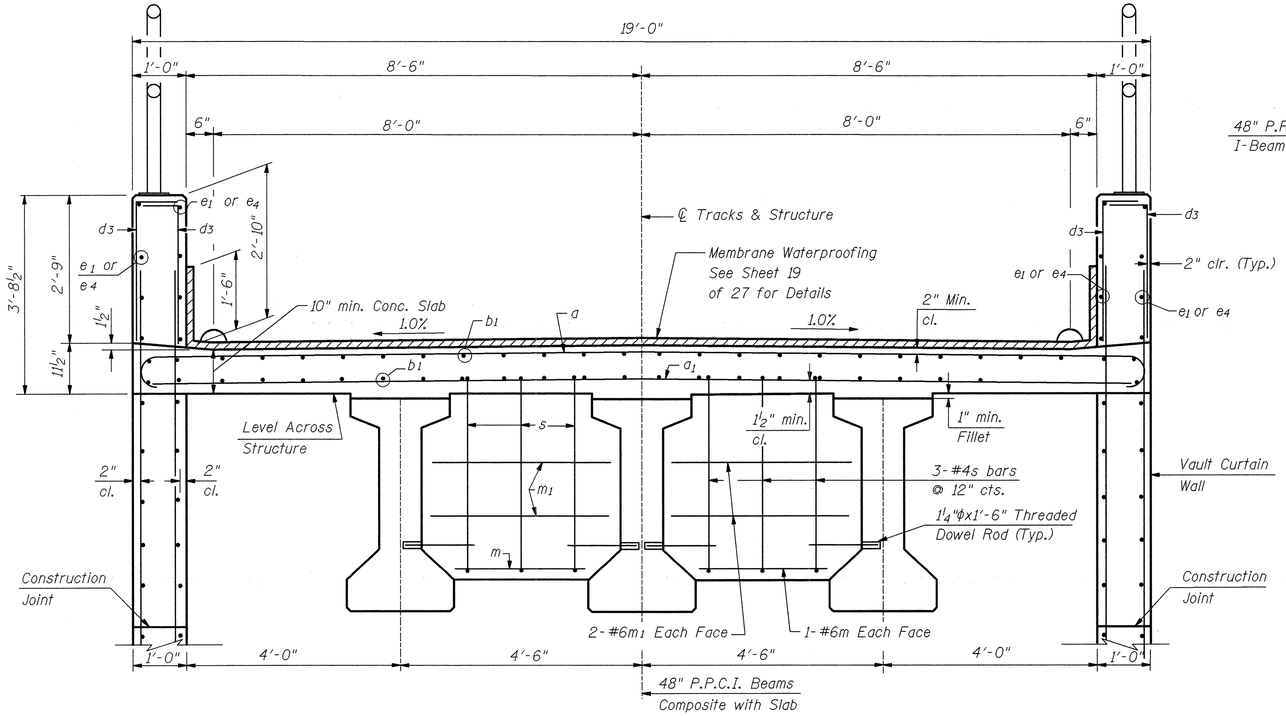

SECTION G-G

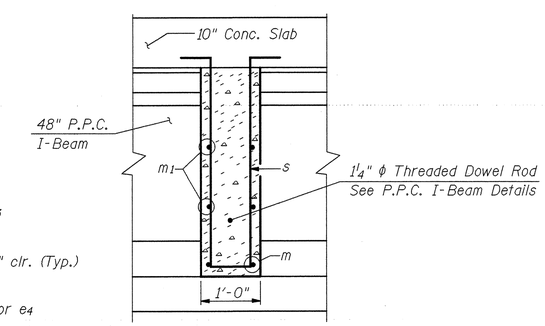

SECTION H-H

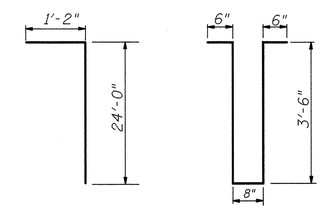

BAR b BAR s

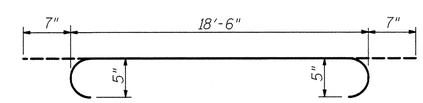

BAR a

See Sheet 20 of 27
For e, e1, e4, e6, and d3 bars

SOUTH VAULT DECK PLAN
UNION PACIFIC RAILROAD
OVER MEREDITH DRIVE
SANGAMON COUNTY
SEC. 98-00009-00-BR
STA. 9437+93.49
STRUCT. NO. 084-9946

ie consultants
6420 South Sixth Street
Springfield, Illinois 62707
Tel. (217) 529-8027
Fax (217) 529-4543
ieSpringfield@ie-consultants.com
www.ie-consultants.com

DESIGNED BY:	CHECKED BY:	DRAWN BY:	DATE:
G.B.M.	D.R.B.	J.P.H.	1-3-03

FILE: 00620KOT2.DGN 11/07/03 10:43:04 AM