C.H.	SECTION	COUNTY	TOTAL SHEETS	SHEET NO.
NA	98-00009-00-BR	SANGAMON	107	47
FED. ROAD DIST. NO.	ILLINOIS	FED. AID PROJECT		
M.P. 179 SPRINGFIELD SUBDIVISION				
SHEET 10 OF 27				

93346

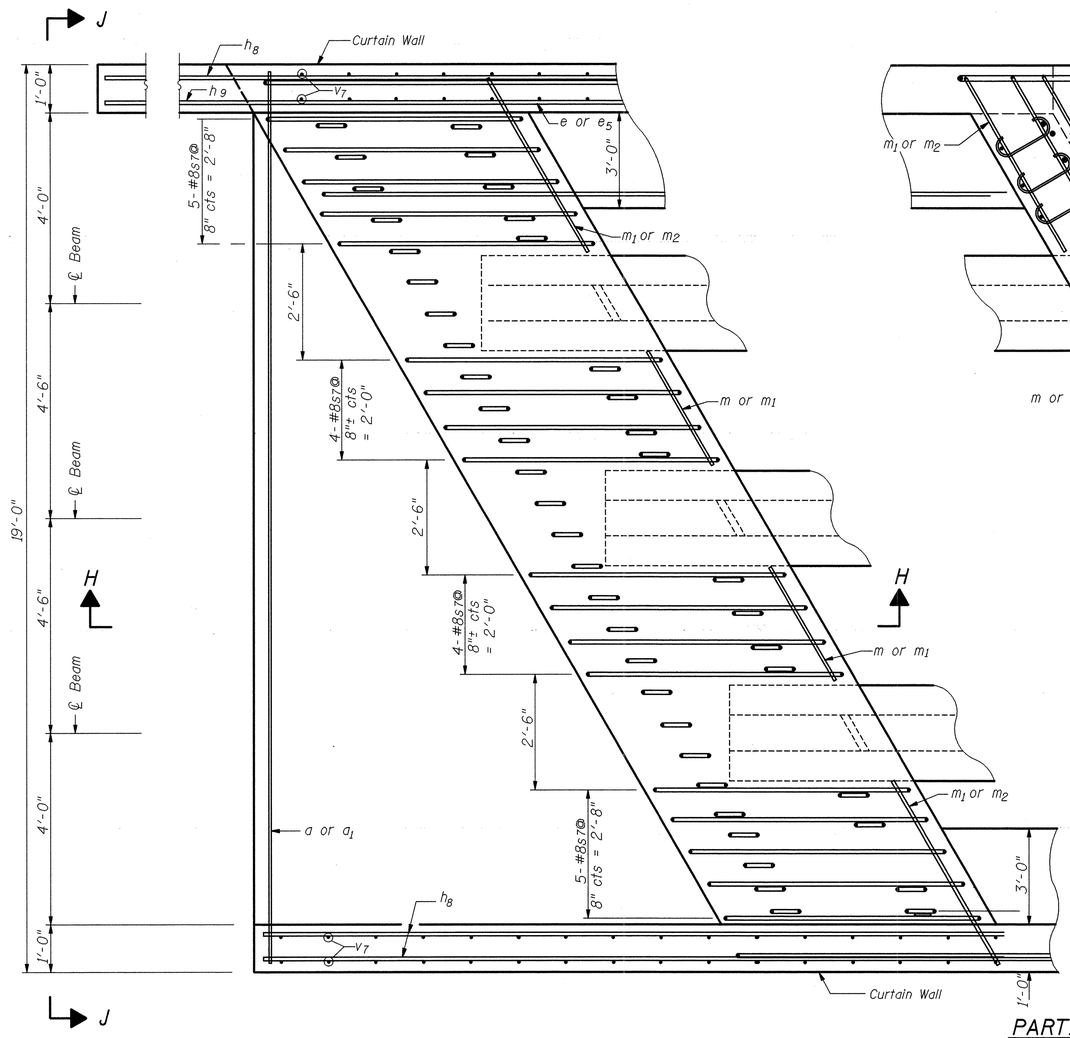

PARTIAL PLAN

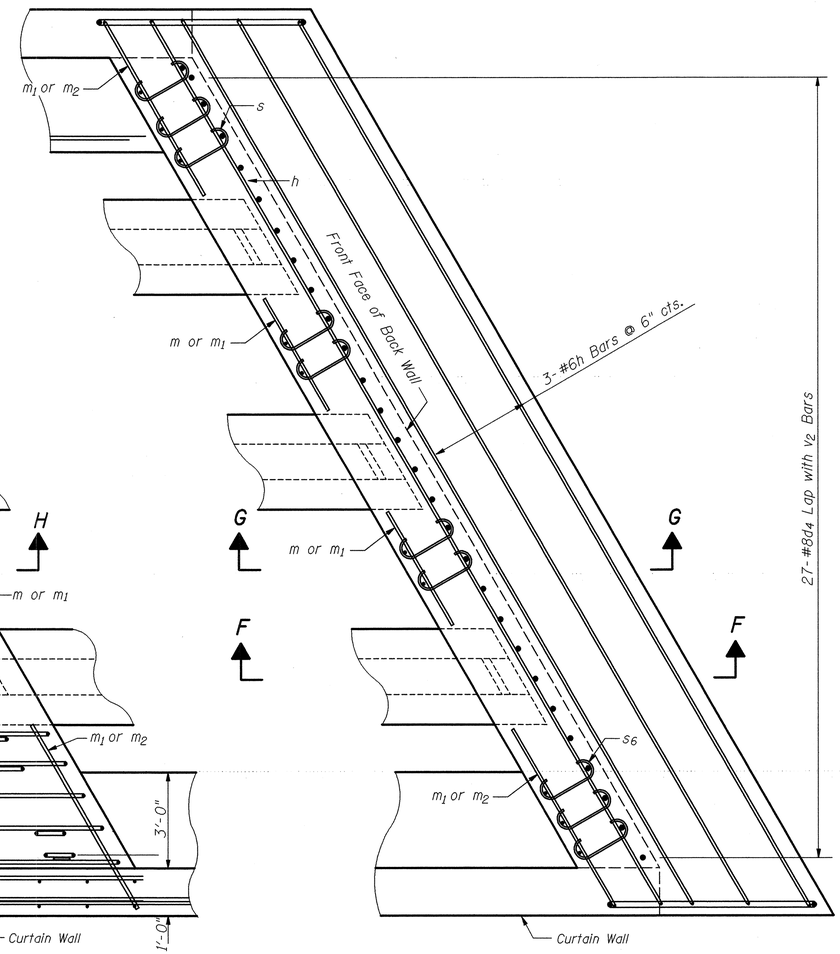

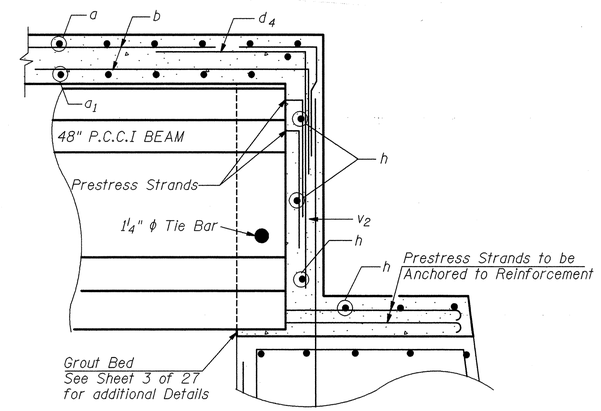

SECTION F-F

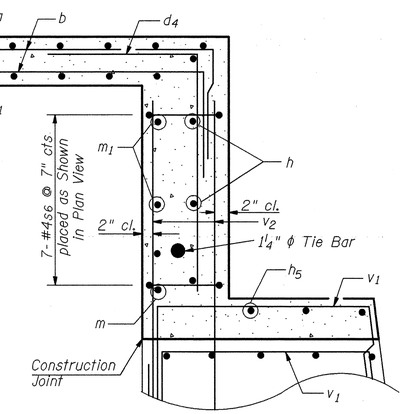

SECTION G-G

See Drawing 3 of 27 for Additional Details

NOTE:
For Bar Chart & Details See Sheet, 12, 13, & 14 of 27.

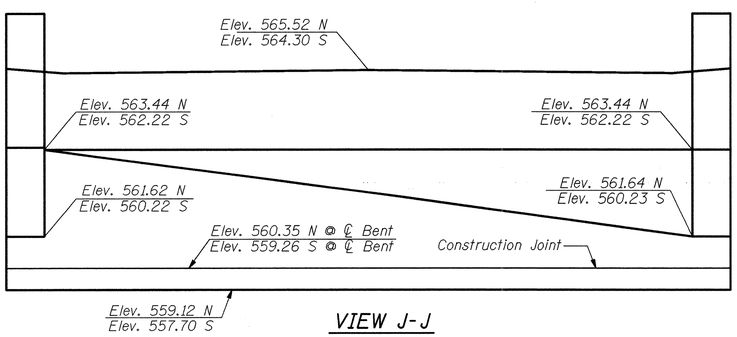

VIEW J-J

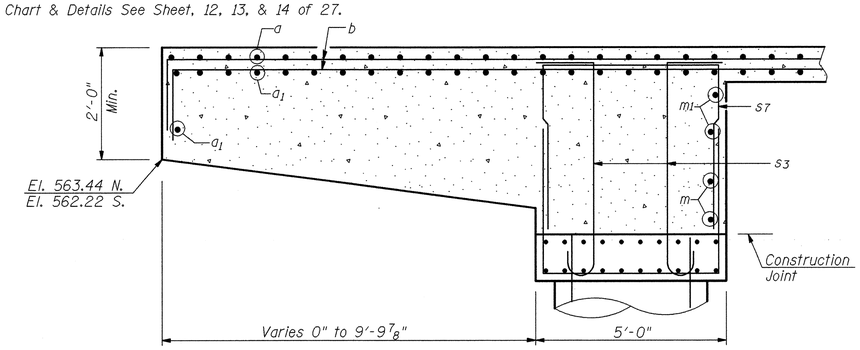

SECTION H-H

NOTE:
Work this sheet with sheets 5, 6, 7, 8, 9, & 10 of 27.

VAULT DIAPHRAGM DETAILS
UNION PACIFIC RAILROAD
OVER MEREDITH DRIVE
SANGAMON COUNTY
SEC. 98-00009-00-BR
STA. 9437+93.49
STRUCT. NO. 084-9946

ie consultants
6420 South Sixth Street
Springfield, Illinois 62707
Tel. (217) 529-8027
Fax (217) 529-4543
ieSpringfield@ie-consultants.com
www.ie-consultants.com

DESIGNED BY:	CHECKED BY:	DRAWN BY:	DATE:
GBM	DRB	THW	1-3-03

FILE: 00620ET1.DGN 11/07/03 10:27:10 AM