C.H.	SECTION	COUNTY	TOTAL SHEETS	SHEET NO.
NA	98-00009-00-BR	SANGAMON	107	41
FED. ROAD DIST. NO.	ILLINOIS	FED. AID PROJECT		
M.P. 179 SPRINGFIELD SUBDIVISION				
SHEET 4 OF 27				

93346

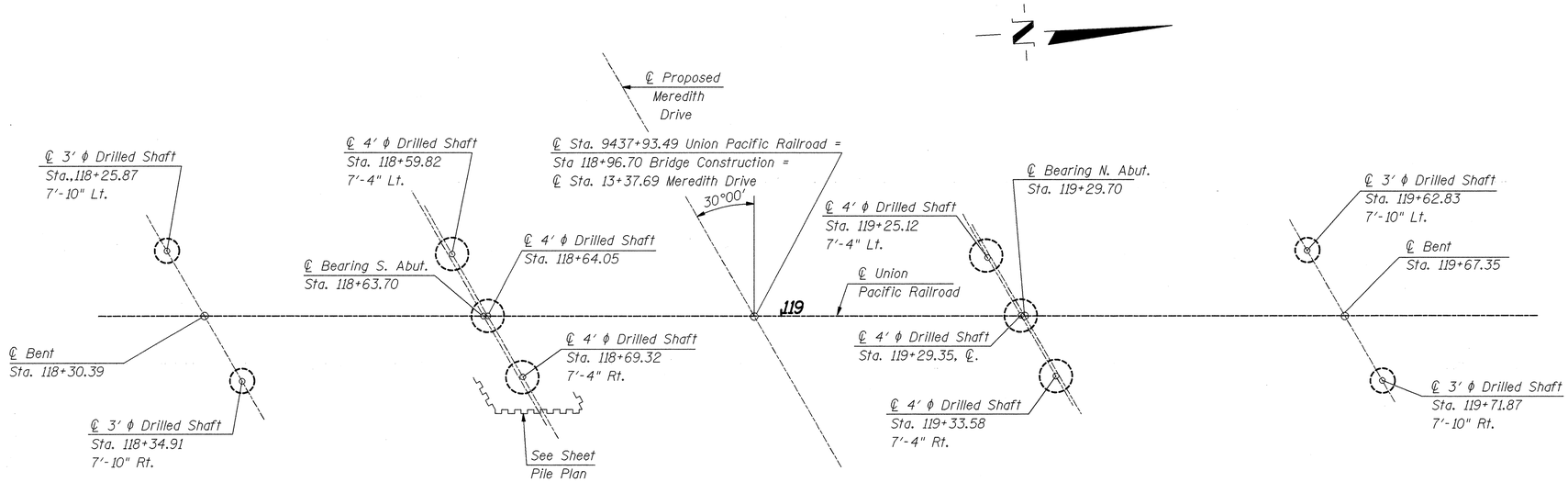

FOOTING PLAN

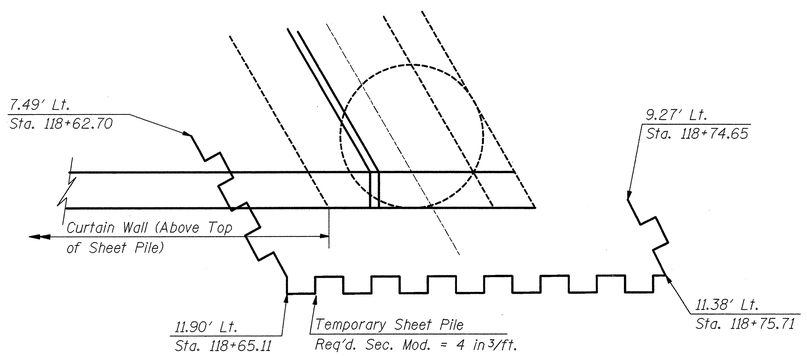

SHEET PILE PLAN

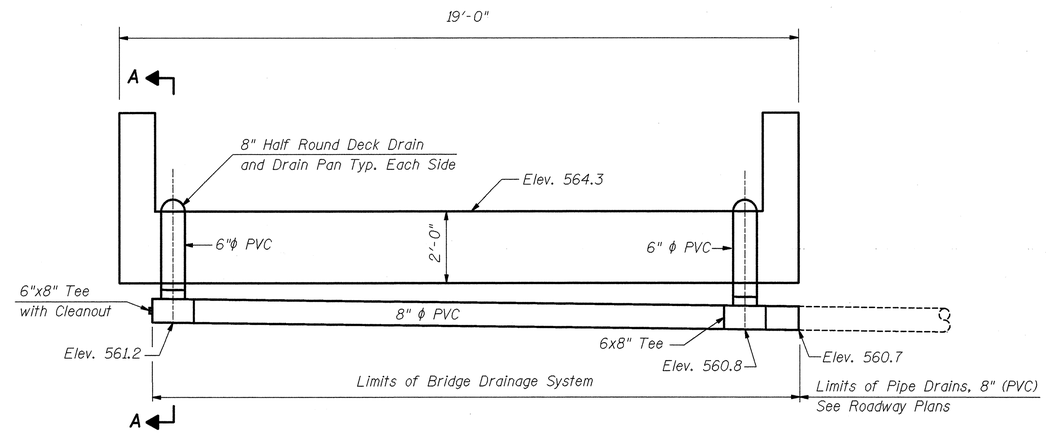

DRAINAGE SYSTEM AT END OF SOUTH ABUTMENT

See Sheet 19 of 27 for additional Details

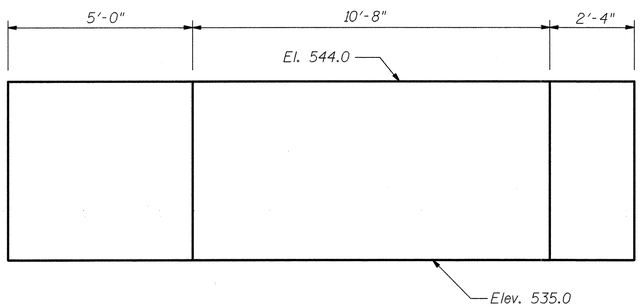

SHEET PILE ELEVATION

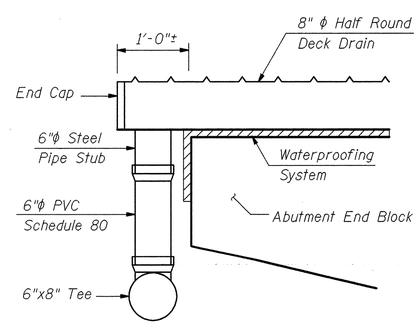

SECTION A-A

FOOTING PLAN AND
TEMPORARY SHEET PILING
UNION PACIFIC RAILROAD
OVER MEREDITH DRIVE
SANGAMON COUNTY
SEC. 98-00009-00-BR
STA. 9437+93.49
STRUCT. NO. 084-9946

ie consultants
6420 South Sixth Street
Springfield, Illinois 62707
Tel. (217) 529-8027
Fax (217) 529-4543
ieSpringfield@ie-consultants.com
www.ie-consultants.com

DESIGNED BY:	CHECKED BY:	DRAWN BY:	DATE:
G.B.M.	D.R.B.	J.P.H.	1-3-03

FILE: 00623HPL.DGN 11/07/03 10:22:13 AM