C.H.	SECTION	COUNTY	TOTAL SHEETS	SHEET NO.
NA	98-00009-00-BR	SANGAMON	107	38
FED. ROAD DIST. NO.	ILLINOIS	FED. AID PROJECT		
M.P. 179 SPRINGFIELD SUBDIVISION				
SHEET 1 OF 27				

93346

B.M. # 107: Chiseled "□" Top of South End of East Headwall of 4.5′ x 6′ Arch Culvert under U.P.R.R. Elev. 541.52

NOTES: No Existing Bridge, No Highway Traffic.
Railroad Traffic to be maintained on temporary Shoofly East of Bridge.
Temporary Sheet Piling will be Required.

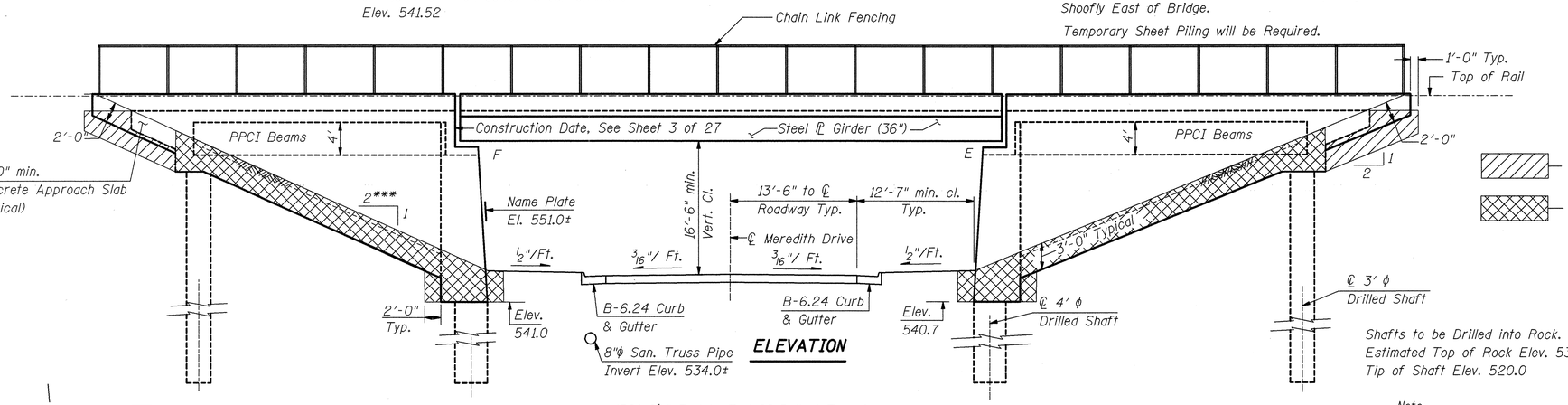

ELEVATION

Hatched Area indicates Porous Granular Backfill, Special

Cross-Hatched Area indicates Limits of Structure Excavation

Shafts to be Drilled into Rock.
Estimated Top of Rock Elev. 530.0
Tip of Shaft Elev. 520.0

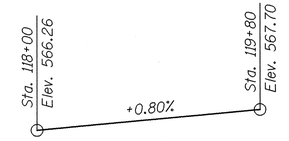

TOP OF RAIL ELEVATION
UNION PACIFIC LINES

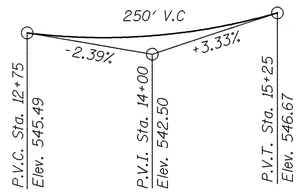

PROFILE GRADE
MEREDITH DRIVE

Note:
Working Drawings for all Excavations, and Temporary Shoring Planned Within 20 Feet of any Railroad Embankment or Track Must be Prepared by the Contractor and Submitted to the UPRR for Review and Approval Prior to Beginning That Portion of the Work.

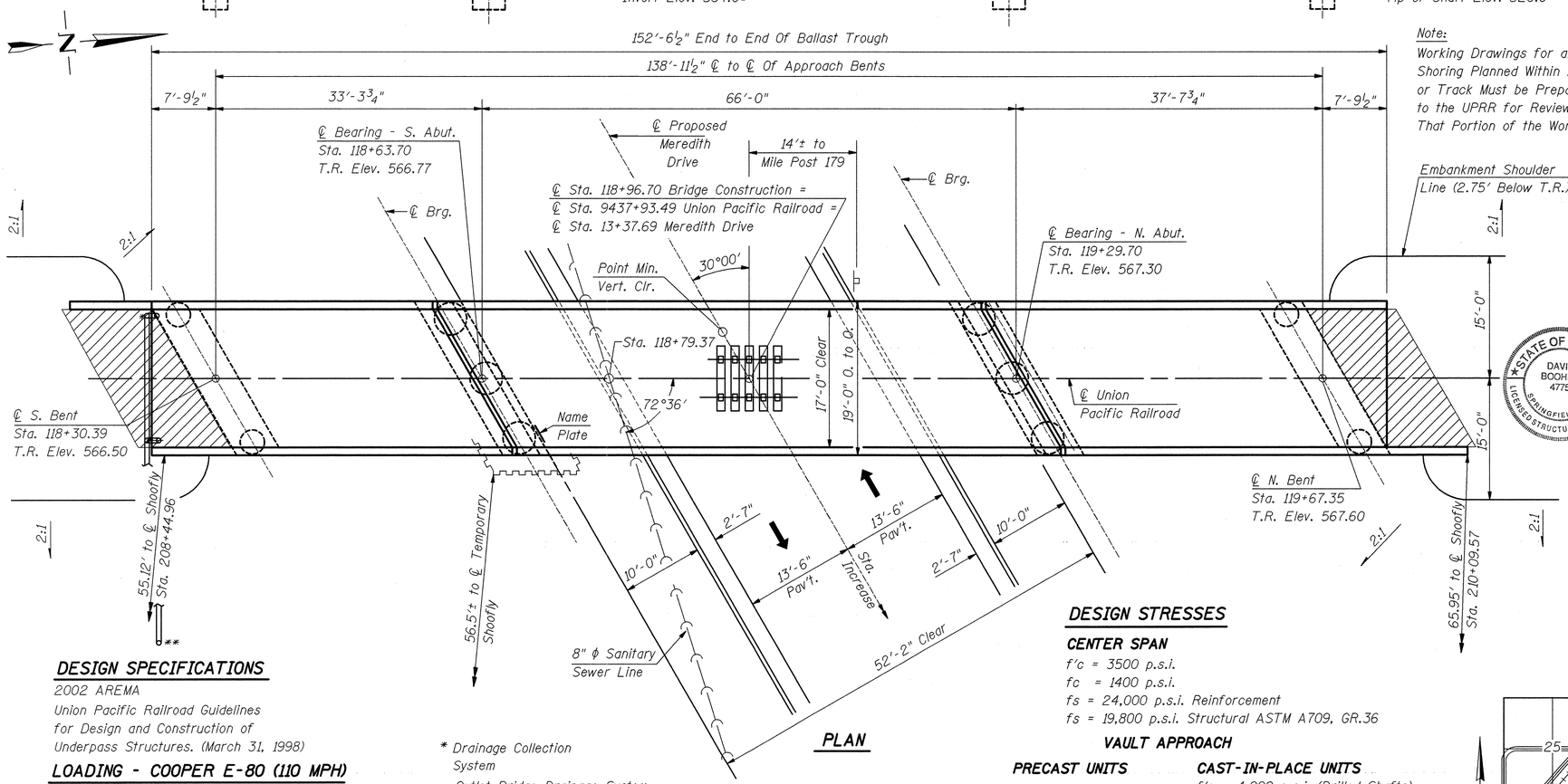

PLAN

UNION PACIFIC RAILROAD
S.N.084-9946 BUILT 20 BY
VILLAGE OF SHERMAN
SEC. 98-00009-00-BR
PROJECT NO. HSR-00D6(66)
STATION 9537+93.49
MILE POST 179
LOADING COOPER E-80

NAME PLATE
IDOT STD. 515001

STATE OF ILLINOIS
DAVID BOOHER
4775
SPRINGFIELD, ILL.
LICENSED STRUCTURAL ENGINEER

I certify that to the best of my knowledge, information and belief, this bridge design is structurally adequate for the design loading shown on the plans. The design is an economical one for the style of structure and complies with requirements of the current AASHTO Standard Specifications for Highway Bridge.

DAVID BOOHER ILLINOIS S.E. 081-004775 — 11-7-03 DATE

EXPIRES 11/30/2004

DESIGN SPECIFICATIONS
2002 AREMA
Union Pacific Railroad Guidelines for Design and Construction of Underpass Structures. (March 31, 1998)

LOADING - COOPER E-80 (110 MPH)
Deadload includes Future Total Ballast Depth of 30″.

* Drainage Collection System
** Outlet Bridge Drainage System to Inlet. See Roadway plans.
*** Slope Varies to meet Sidewalk 2:1 at Rt. Angles Maximum

DESIGN STRESSES
CENTER SPAN
f′c = 3500 p.s.i.
fc = 1400 p.s.i.
fs = 24,000 p.s.i. Reinforcement
fs = 19,800 p.s.i. Structural ASTM A709, GR.36

VAULT APPROACH

PRECAST UNITS
f′c = 6,000 p.s.i.
fci = 5,000 p.s.i.
f′s = 270,000 p.s.i.
f′si = 202,000 p.s.i.

CAST-IN-PLACE UNITS
f′c = 4,000 p.s.i. (Drilled Shafts)
f′c = 3,500 p.s.i. (Superstructure)
f′c = 3,500 p.s.i. (Substructure)
f′s = 60,000 p.s.i.

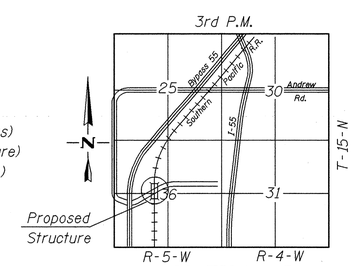

LOCATION MAP

GENERAL PLAN AND ELEVATION
UNION PACIFIC RAILROAD
OVER MEREDITH DRIVE
SANGAMON COUNTY
SEC. 98-00009-00-BR
STA. 9437+93.49 U.P.R.R.
STRUCT. NO. 084-9946

ie consultants
6420 South Sixth Street
Springfield, Illinois 62707
Tel. (217) 529-8027
Fax (217) 529-4543
ieSpringfield@ie-consultants.com
www.ie-consultants.com

DESIGNED BY:	CHECKED BY:	DRAWN BY:	DATE:
G.B.M.	D.R.B.	J.P.H.	1-3-03

FILE: 0062GPE.DGN 10:20:46 AM 11/07/03