C.H.	SECTION	COUNTY	TOTAL SHEETS	SHEET NO.
NA	98-00009-00-BR	SANGAMON	107	36
FED. ROAD DIST. NO.	ILLINOIS	FED. AID PROJECT		
M.P. 179 SPRINGFIELD SUBDIVISION				

93346 **SHEET 3 OF 4**

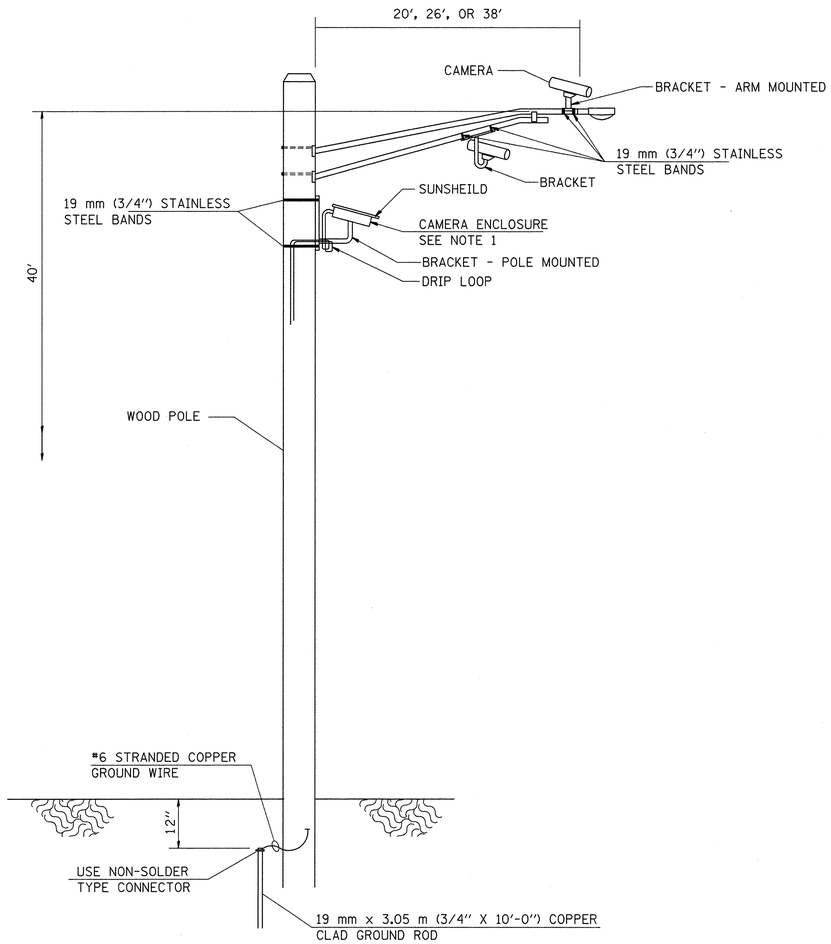

VIDEO DETECTION SYSTEM INSTALLATION
ARM MOUNTED OR POLE MOUNTED CAMERA

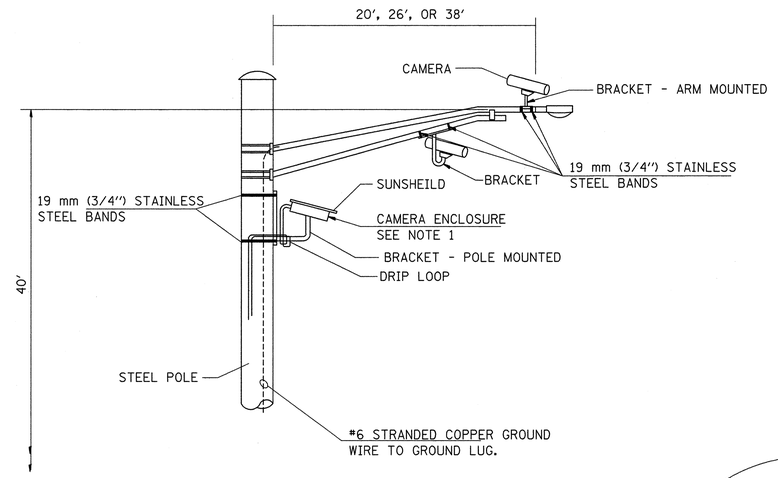

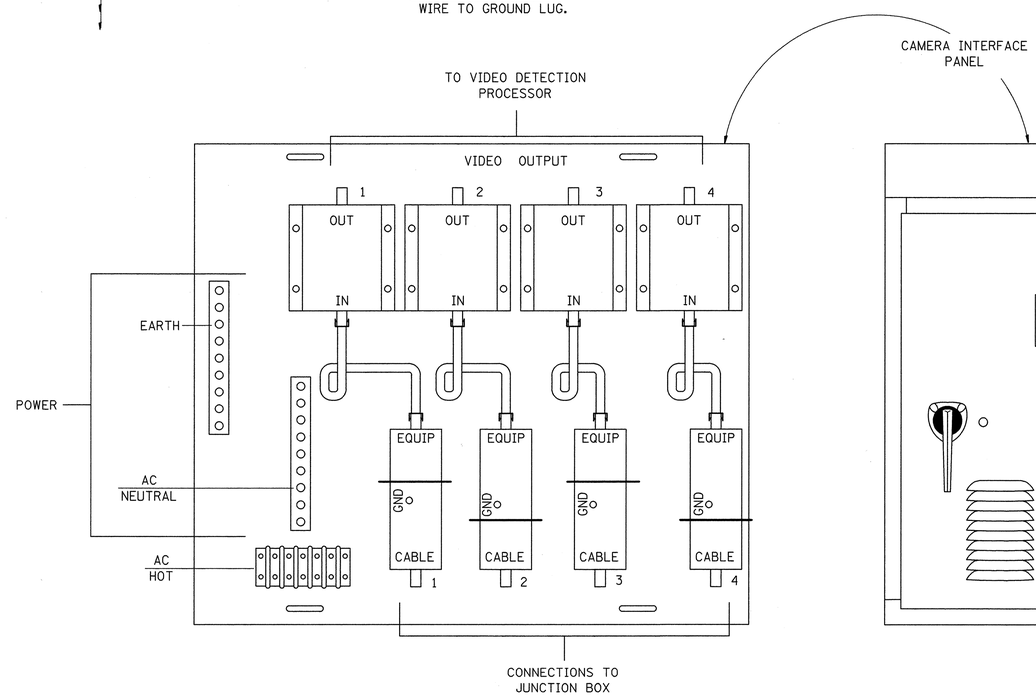

NOTE 1: CAMERA CAN BE ROTATED INSIDE THE ENCLOSURE AFTER INSTALLATION, TO ALIGN HORIZON AT HORIZONTAL PLANE.

REVISIONS	
NAME	DATE
WCD	31OCT97

ILLINOIS DEPARTMENT OF TRANSPORTATION

VIDEO DETECTION SYSTEM INSTALLATION DETAIL

SCALE: VERT. HORIZ.
DATE : 1/03/03

DRAWN BY CADD
CHECKED BY WCD

11/06/03

D6 PROJECT: d6stds FILE: VCAMERA.DGN