STATE OF ILLINOIS
DEPARTMENT OF TRANSPORTATION

| ROUTE NO. | SECTION | COUNTY | TOTAL SHEETS | SHEET NO. |
|---|---|---|---|---|
| S.B.I. F.A. | | | 200 | 111 |
| FED. ROAD DIST. NO. 7 | | ILLINOIS | FED. AID PROJECT- | |

SHEET NO. 2
5 SHEETS
92656

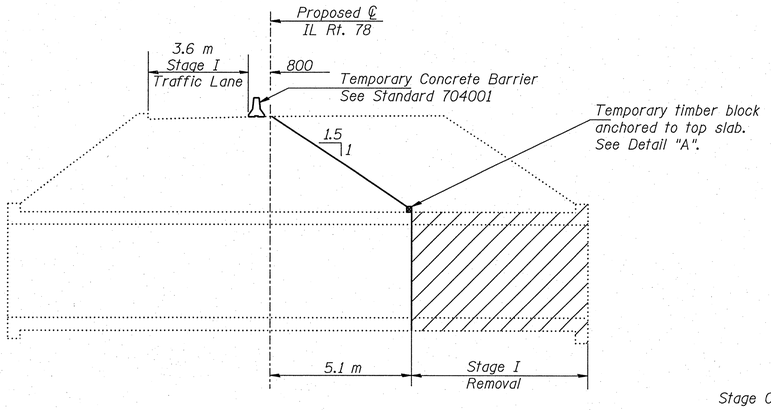


STAGE I REMOVAL

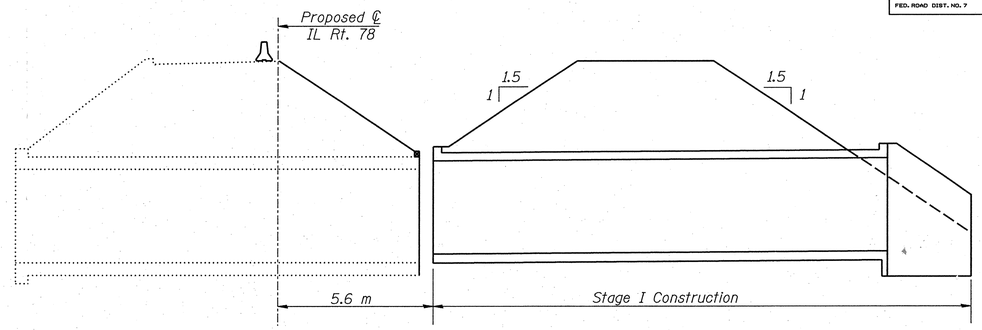


STAGE I CONSTRUCTION

Stage Construction Notes:
All Stage Construction views are looking north.
See Roadway Plans for quantity of Temporary Concrete Barrier.

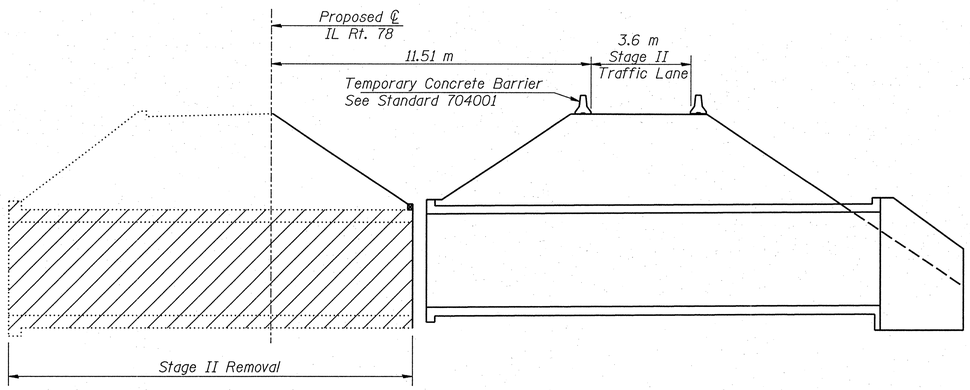


STAGE II REMOVAL

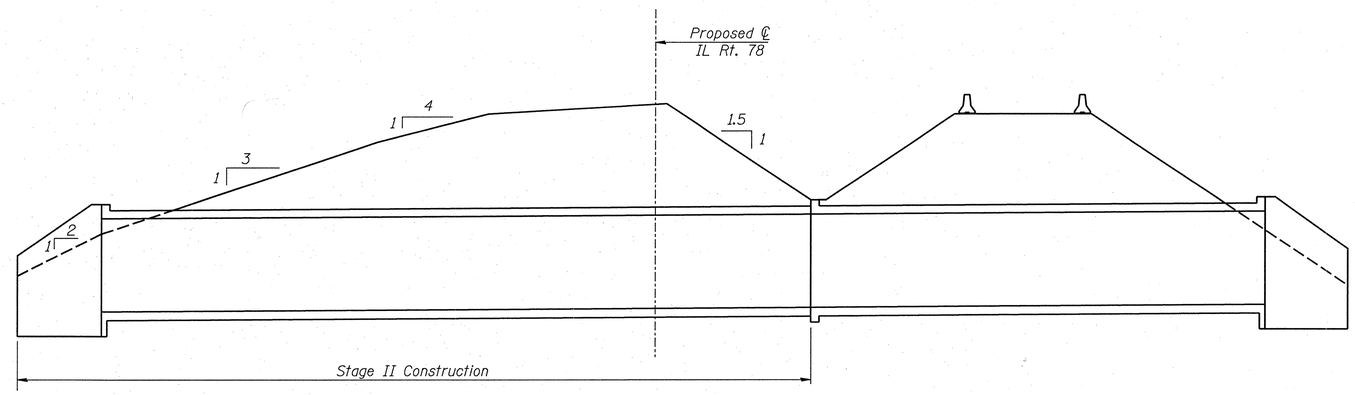


STAGE II CONSTRUCTION

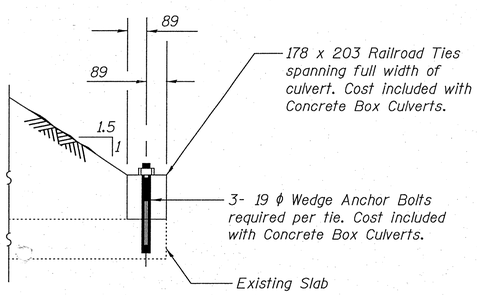


DETAIL "A"

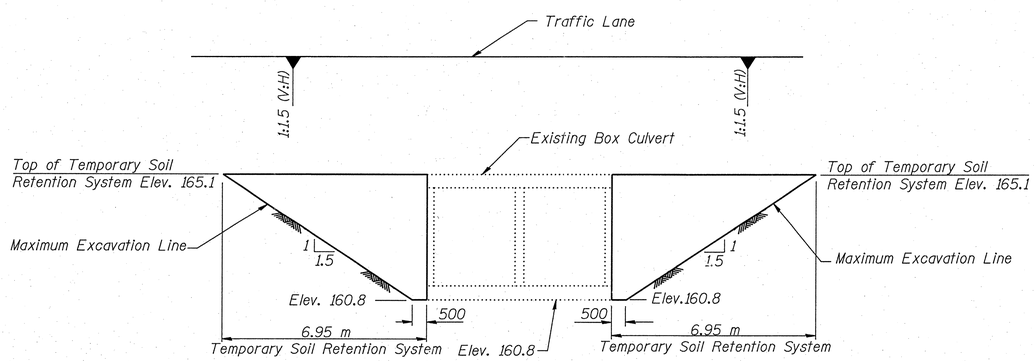


TEMPORARY SOIL RETENTION SYSTEM

A cantilevered sheet piling design does not appear feasible and additional members or other retention systems may be necessary. The Contractor shall submit a temporary soil retention system design including plan details and calculations for review and acceptance by the Engineer.

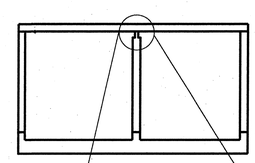

SECTION THRU BARREL
Near downstream end

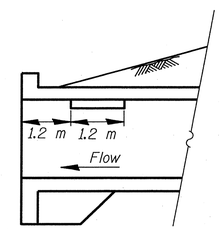


LONGITUDINAL SECTION

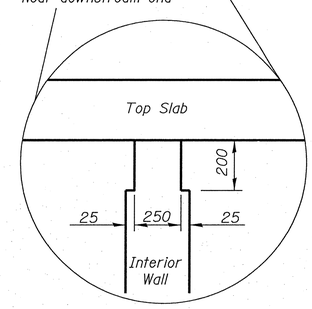


NOTCH DETAIL

Note: Notch formed by rough-finished board attached to and removed with formwork.

PHOEBE NESTING SITE
Cost of Phoebe Nesting Site included with Concrete Box Culverts

STAGE CONSTRUCTION
DOUBLE BOX CULVERT
IL RTE 78 OVER CREEK
F.A.P. RTE 614 SECTION 147B
MORGAN COUNTY
STATION 18+664.055
S.N. 069-C151

| | | | |
|---|---|---|---|
| DESIGNED DDB | RANDOLPH & ASSOCIATES, INC. 911 W. PIONEER PARKWAY, PEORIA, IL 61615-2124 TEL.309-693-8644 FAX.309-693-8655 1-800-831-9221 HTTP://WWW.RANDOLPHINC.COM CONSULTING ENGINEERS • LAND SURVEYORS | FILE NUMBER 136.080 | |
| CHECKED JFJ | | | |
| DRAWN JDB | | DATE Dec. 23, 2003 | |
| CHECKED DDB | | | |

r:\Projects\0136\0136-080 IL 78\double box culvert\02-stage constr.dgn
2:04:16 PM
12/22/2003