STATE OF ILLINOIS
DEPARTMENT OF TRANSPORTATION

ROUTE NO.	SECTION	COUNTY	TOTAL SHEETS	SHEET NO.
S.B.I. F.A.P. 614	147(RS -5,B-1)	MORGAN	198	104
FED. ROAD DIST. NO. 7	ILLINOIS	FED. AID PROJECT-		

SHEET NO. 7
12 SHEETS

92656

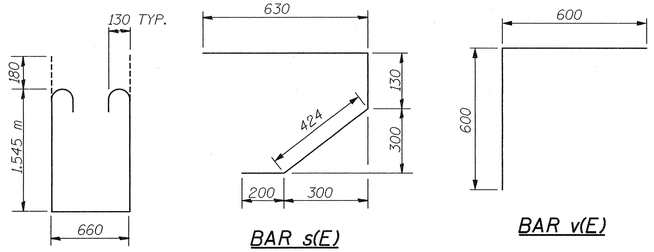

BAR s(E)

BAR v(E)

BAR s1(e)

Notes: Reinforcement bars shown on this sheet are included in Superstructure Bill of Material on Sheet 6 of 12
All dimensions are in millimeters (mm) except as noted.
For bar splicer details, see sheet 2 of 12.
Concrete diaphragm is billed with concrete superstructure on sheet 6 of 12.

MOMENT TABLE

INTERIOR BEAM MOMENT TABLE		0.5 Span
I	(10^6 mm^4)	88955
I'	(10^6 mm^4)	199184
Sb	(10^3 mm^3)	140263
Sb'	(10^3 mm^3)	204712
St	(10^3 mm^3)	120633
St'	(10^3 mm^3)	499209
DL	(kN/m)	17.50
M DL	(kN-m)	1855
s DL	(kN/m)	6.34
Ms DL	(kN-m)	672
M LL	(kN-m)	1043
M (Imp)	(kN-m)	240

INTERIOR BEAM REACTION TABLE		Abut.
R DL	(kN)	255
Rs DL	(kN)	92
R LL	(kN)	154
Imp.	(kN)	35
R (Total)	(kN)	536

I and I' are the moment of inertia and composite moment of inertia of beam section.
Sb and S'b are the non-composite and composite section modulus for the bottom fiber of the prestressed beam.
St and S't are the non-composite and composite section modulus for the top fiber of the prestressed beam.

MDL is the moment due to dead loads on the non-composite prestressed beam. It is conservatively calculated at 0.5 of the span.
MsDL is the moment due to dead loads on the composite section.
MLL is the moment due to live loads on the composite section.
M (Imp) is the moment due to live load impact on the composite sections.

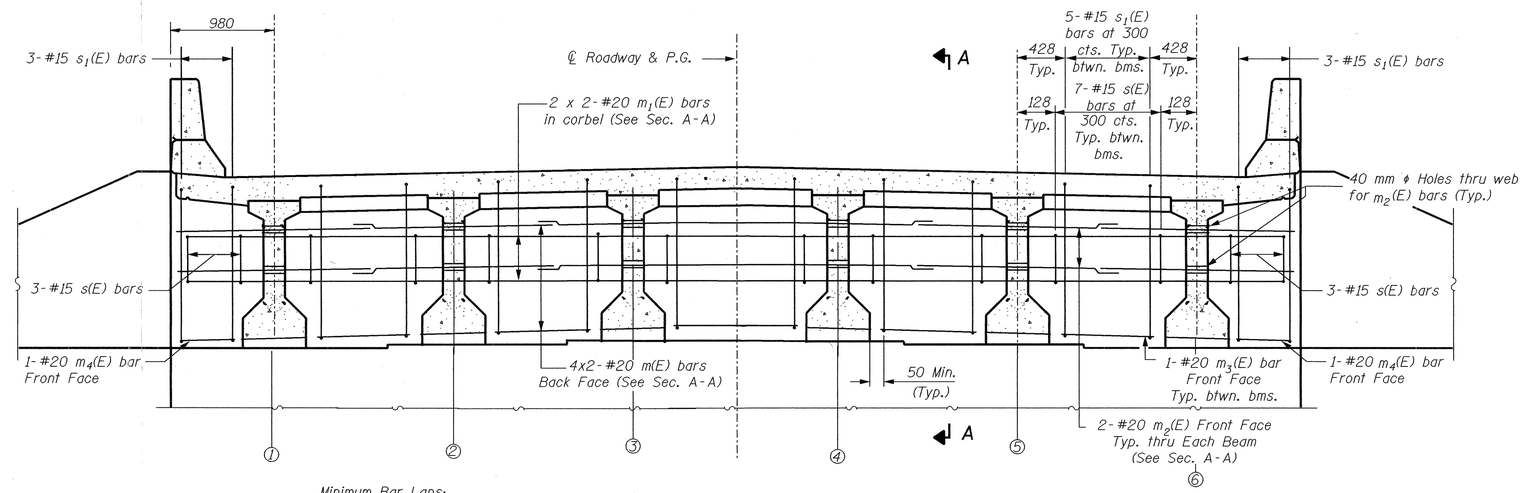

Minimum Bar Laps:
#20 = 850

DIAPHRAGM ELEVATION AT ABUTMENT - LOOKING NORTH
(South Abutment Similar)

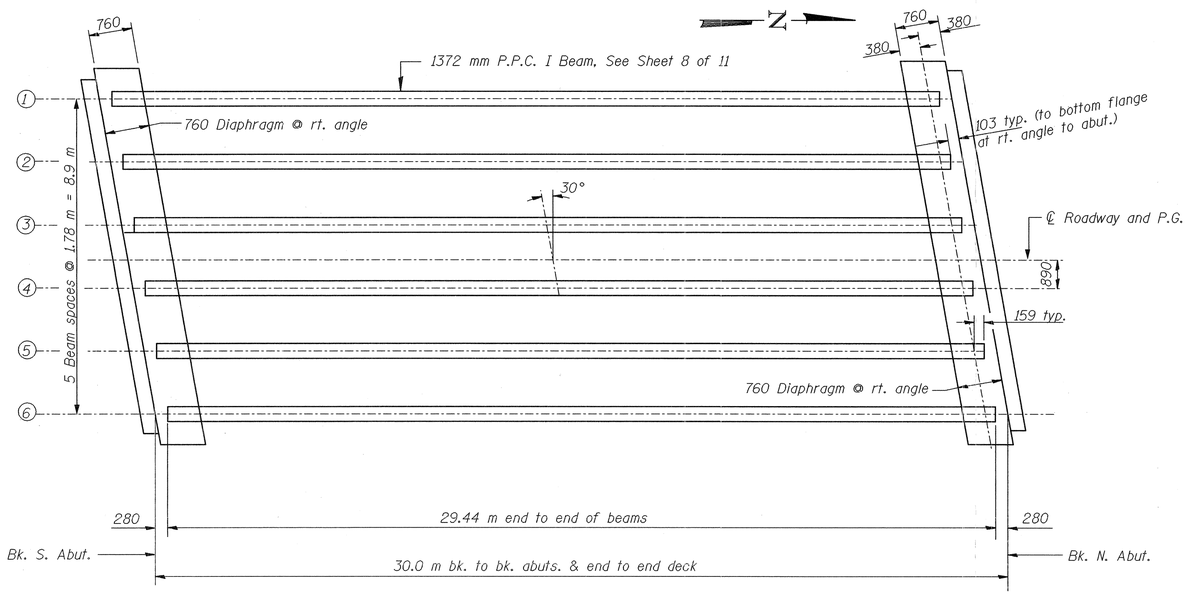

FRAMING PLAN
All beams are Precast Prestressed Concrete I Beams, 1372 mm deep

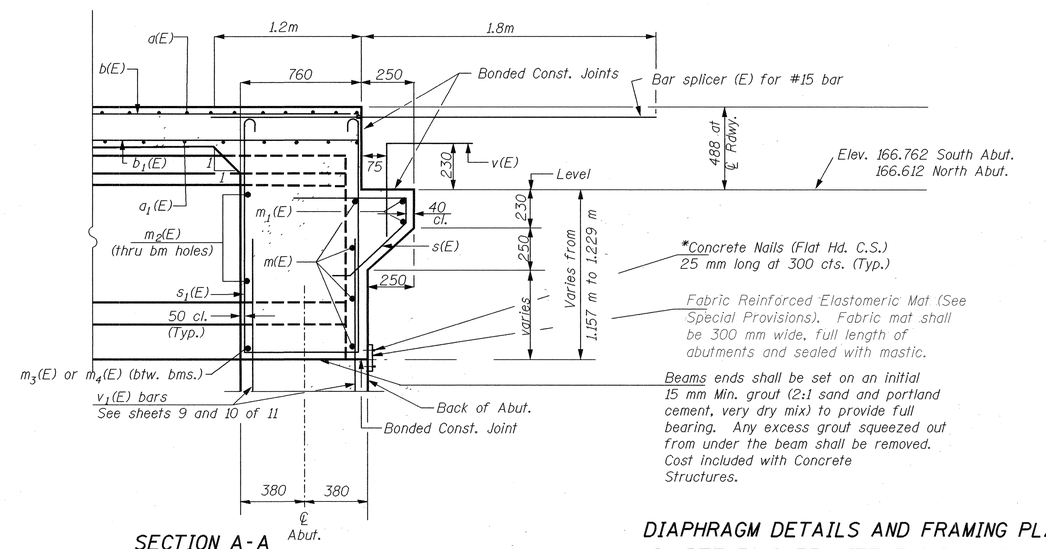

SECTION A-A

Dimensions at right angles to abutment, except as shown.
*Cost included with "Concrete Structures".

DIAPHRAGM DETAILS AND FRAMING PLAN
IL RTE 78 OVER LITTLE INDIAN CREEK
F.A.P. RTE 614
SECTION 147(RS-5,B-1)
MORGAN COUNTY
STATION 18+980
S.N. 069-0502

DESIGNED JFJ	RANDOLPH & ASSOCIATES, INC. 911 W. PIONEER PARKWAY, PEORIA, IL 61615-2124 TEL.309-693-5044 FAX.309-693-6055 1-800-831-1021 HTTP://WWW.RANDOLPHINC.COM CONSULTING ENGINEERS • LAND SURVEYORS	FILE NAMEER	136.80
CHECKED DDB			
DRAWN HLS		DATE	January 2002
CHECKED DDB			

23 AUG 102 12:34:51 r:\projects\0136\0136-080 il 78\indian creek bridge\design\plan set\07-diaphragm.dgn