STATE OF ILLINOIS
DEPARTMENT OF TRANSPORTATION

ROUTE NO.	SECTION	COUNTY	TOTAL SHEETS	SHEET NO.
S.B.I. F.A.P. 614	147(RS -5,B-1)	MORGAN	198	103
FED. ROAD DIST. NO. 7	ILLINOIS	FED. AID PROJECT-		

SHEET NO. 6
12 SHEETS

30.0 m end to end parapet

92656

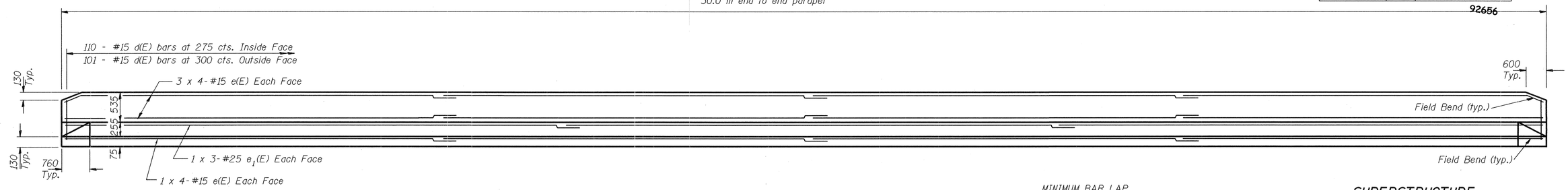

INSIDE ELEVATION OF PARAPET

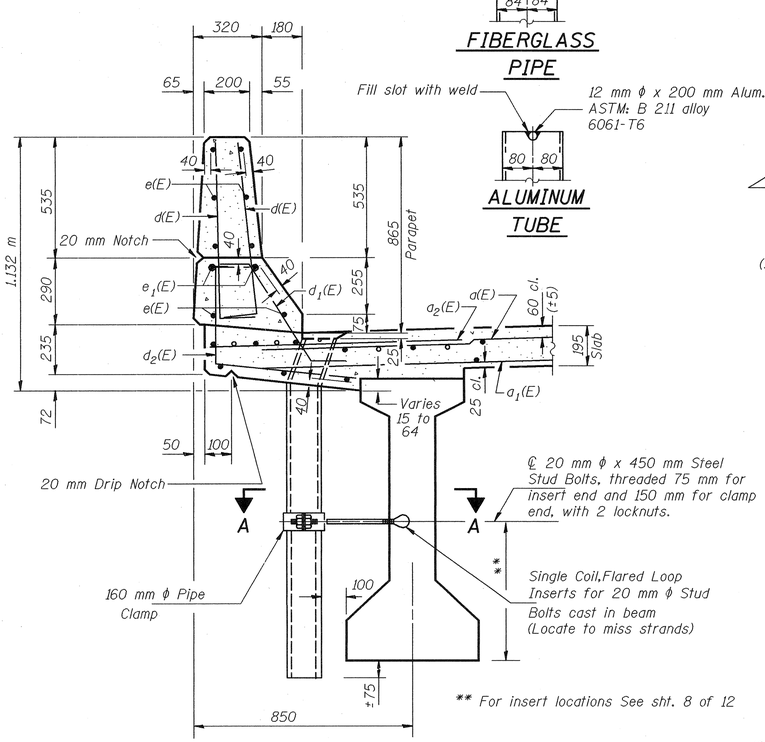

** For insert locations See sht. 8 of 12

SECTION THRU PARAPET

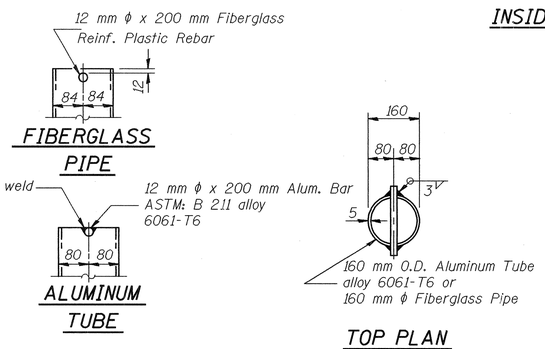

TOP PLAN
(Showing Aluminum Tube)

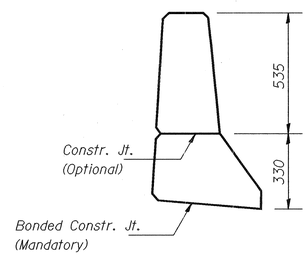

PARAPET JOINT DETAILS

MINIMUM BAR LAP
#15 = 490
#25 = 1.01 m

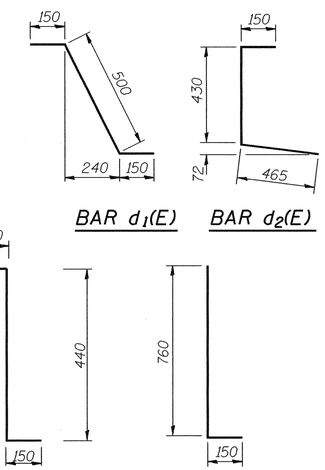

Notes:

Fiberglass pipe shall conform to ASTM D2996, with short-time rupture strength hoop tensile stress of 200 MPa minimum. The surface of the Fiberglass pipe shall be free of bond inhibiting agents.

The exterior surfaces of the floor drains shall be coated by the manufacturer with a pigment that matches the color of the concrete.

The clamping device and inserts shall be galvanized in accordance with AASHTO M 232.

All dimensions are in millimeters (mm) except as noted.

See Sheet 7 of 11 for additional details.

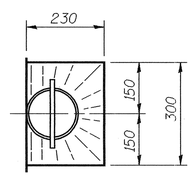

TOP PLAN

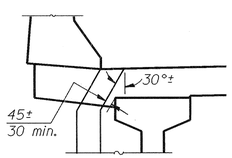

DRAIN DETAIL

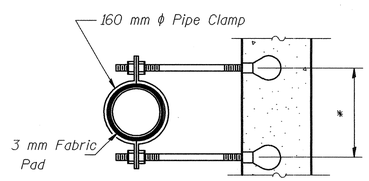

* Dimension as required by Pipe Clamp

SECTION A-A

SUPERSTRUCTURE BILL OF MATERIAL

Bar	No.	Size	Length (m)	Shape
d(E)	252	#15	5.32	
a_1(E)	363	#15	3.76	
a_2(E)	126	#20	1.20	
a_3(E)	8	#25	6.73	
b(E)	185	#15	6.50	
b_1(E)	124	#15	8.00	
d(E)	422	#15	0.91	
d_1(E)	208	#15	0.80	
d_2(E)	202	#15	1.05	
d_3(E)	12	#15	0.74	
e(E)	64	#15	8.00	
e_1(E)	12	#25	10.85	
m(E)	16	#20	6.56	
m_1(E)	8	#20	6.28	
m_2(E)	24	#20	2.95	
m_3(E)	10	#20	1.31	
m_4(E)	4	#20	0.56	
s(E)	82	#15	1.38	
s_1(E)	62	#15	4.11	
v(E)	62	#15	1.20	
Reinforcement Bars Epoxy Coated			kg	12,050
Concrete Superstructure			m^3	108.8

Reinforcement bars designated (E) shall be epoxy coated.
Bars indicated thus 1 x 3-#15 indicates 1 line of bars with 3 lengths per line.

PARAPET DETAILS
AND SUPERSUBSTRUCTURE
IL RTE 78 OVER LITTLE INDIAN CREEK
F.A.P. RTE 614
SECTION 147(RS-5,B-1)
MORGAN COUNTY
STATION 18+980
S.N. 069-0502

DESIGNED JFJ CHECKED DDB DRAWN HLS CHECKED DDB	RANDOLPH & ASSOCIATES, INC. 911 W. PIONEER PARKWAY, PEORIA, IL 61615-2124 TEL. 309-692-9844 FAX. 309-692-6655 1-800-831-5221 HTTP://WWW.RANDOLPHINC.COM CONSULTING ENGINEERS + LAND SURVEYORS	FILE NUMBER 136.080 DATE January 2002

23 AUG 102 12:36:34 r:\projects\0136\0136-080 il 78\indian creek bridge\design\plan set\06-super.dgn