ROUTE NO.	SECTION	COUNTY	TOTAL SHEETS	SHEET NO.
C.H. 5	03-00260-00-BR	CLARK	10	8
FED. ROAD DIST. NO. 7		ILLINOIS	FED. AID PROJECT-	

91307

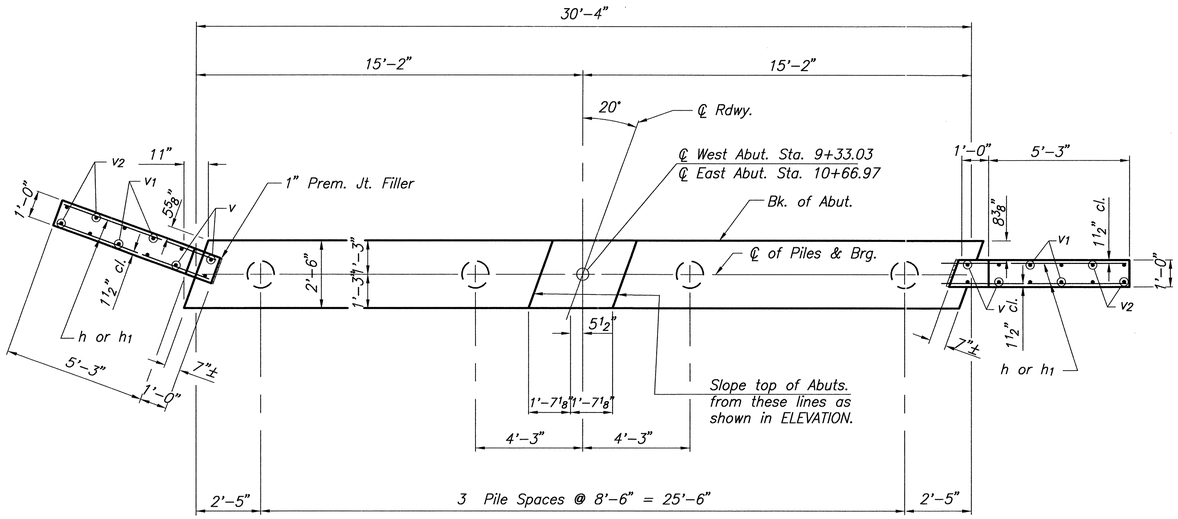

PLAN

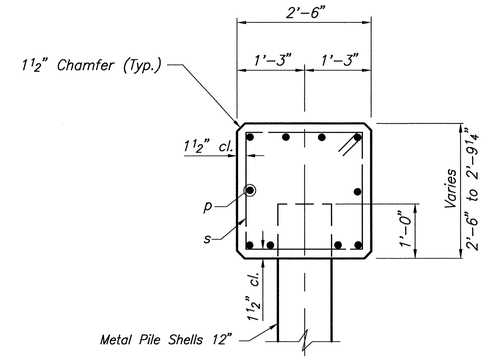

SECTION A-A

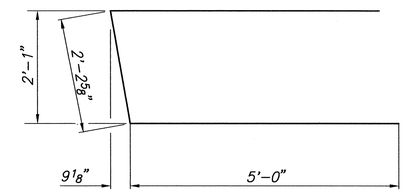

BAR u

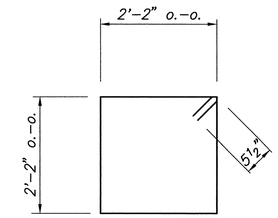

BAR s

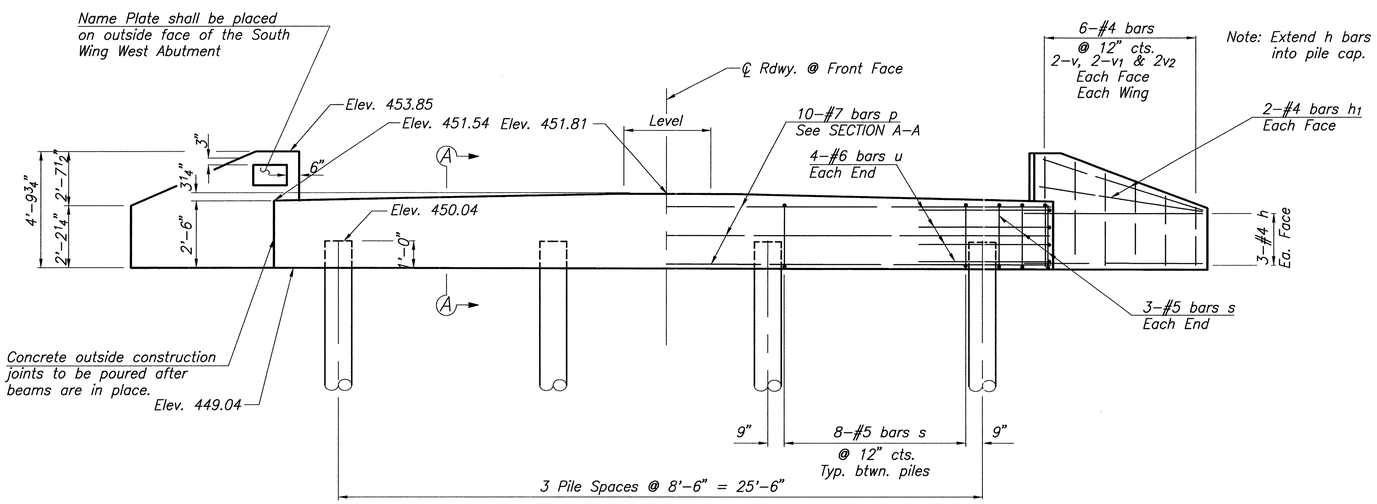

ELEVATION

PILE DATA

Type_____Metal Pile Shell
No. Req'd (2 Abuts.)_____ 8*
Capacity_____ 33 Tons/Pile
Est. Length_____ 45 Feet/Pile (West Abut.)
50 Feet/Pile (East Abut.)

*Includes one metal pile shell test pile to be driven in a permanent location at the West Abutment.

BILL OF MATERIAL - 2 ABUTS.

BAR	NO.	SIZE	LENGTH	SHAPE
h	24	#4	7'-0"	
h1	16	#4	6'-0"	
p	20	#7	30'-0"	
s	60	#5	9'-7"	
u	16	#6	12'-3"	
v	16	#4	4'-3"	
v1	16	#4	3'-3"	
v2	16	#4	2'-3"	
Concrete Structures			Cu. Yd.	17.8
Reinforcement Bars			Pound	2,400
Name Plates			Each	1
Metal Pile Shell 12"			Foot	335
Test Pile, Metal Shells			Each	1

SHEET TITLE
ABUTMENTS

PROJECT
SECTION 03-00260-00-BR
COUNTY HIGHWAY 5
CLARK COUNTY
STATION 10+00

PROJECT NO. 03007
SCALE
DATE 10-29-03
DRAWN BY MRL
CHECKED BY MCB
DRAWING NO. 8 OF 10 SHTS

COOMBE-BLOXDORF P.C.
Engineers / Land Surveyors
Springfield, Illinois
Design Firm License No. 184-002703

ABTS.DWG