ROUTE NO.	SECTION	COUNTY	TOTAL SHEETS	SHEET NO.
C.H. 5	03-00260-00-BR	CLARK	10	7
FED. ROAD DIST. NO. 7		ILLINOIS	FED. AID PROJECT-	

91307

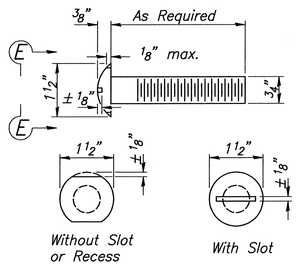

VIEW E-E
ROUND HEAD BOLT

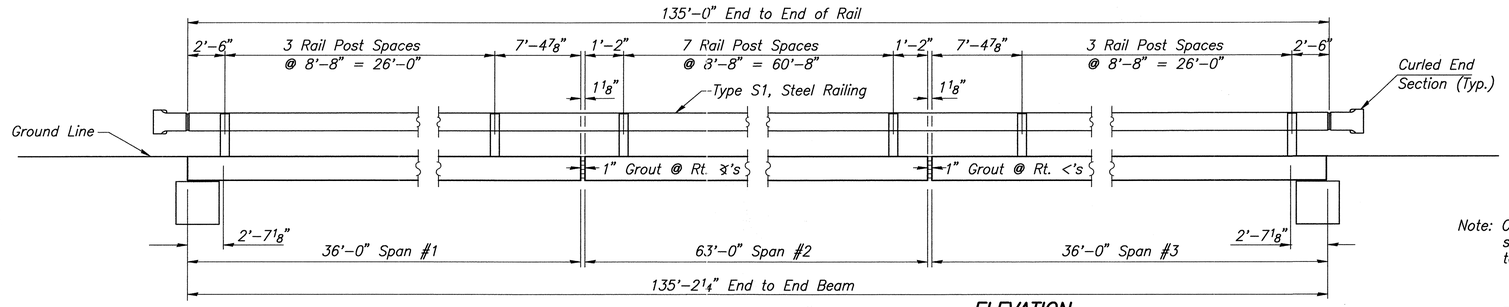

ELEVATION
Showing Inside Face of Rail

Note: Cost of Curled End Sections shall be considered incidental to the Steel Railing, Type S1.

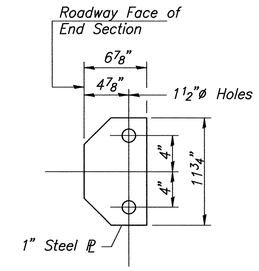

SECTION D-D

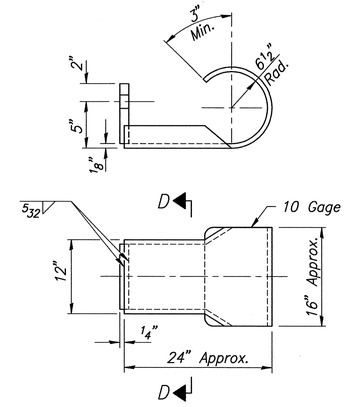

CURLED END SECTION DETAILS
(4 Required)

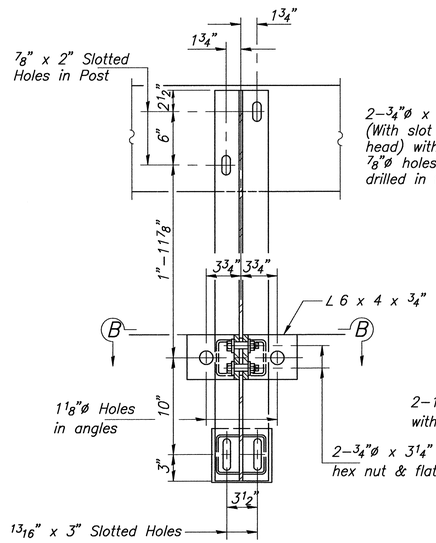

SECTION A-A

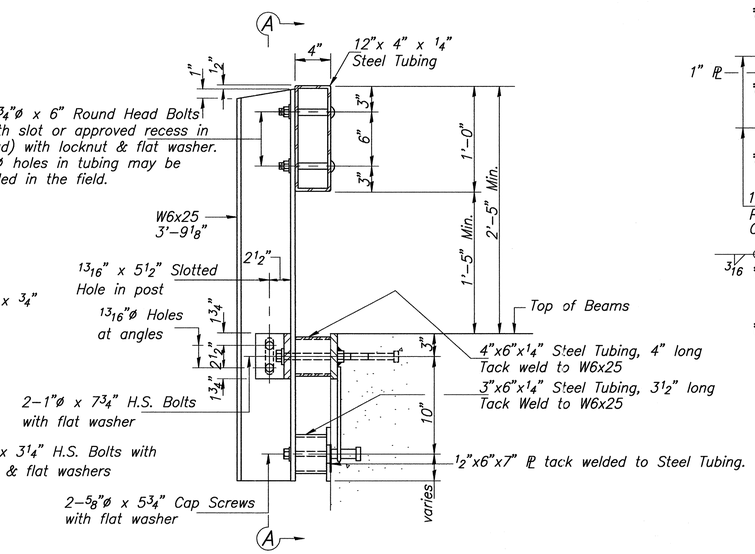

SECTION AT RAIL POST

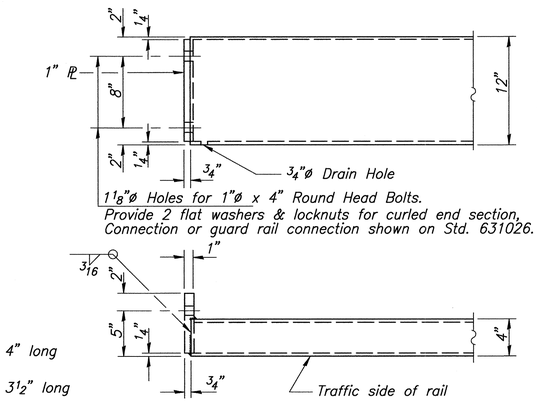

END OF RAIL DETAILS

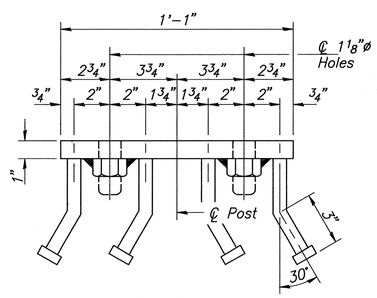

VIEW C-C

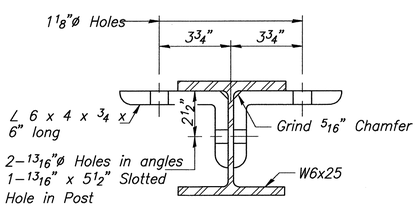

SECTION B-B

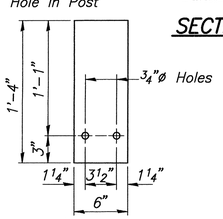

1/4" SHIM PLATE

Note: For multi-span bridges, sufficient 1/4"x6"x1'-4" galvanized steel shims shall be provided to align rail between adjacent spans. Cost Incidental to Steel Railing.

** Whenever the lower insert assemblies interfere with strand locations, the #3 bar shall be cut and adjusted in order to allow raising or lowering of the inserts. Maximum adjustment not to exceed 1/2".

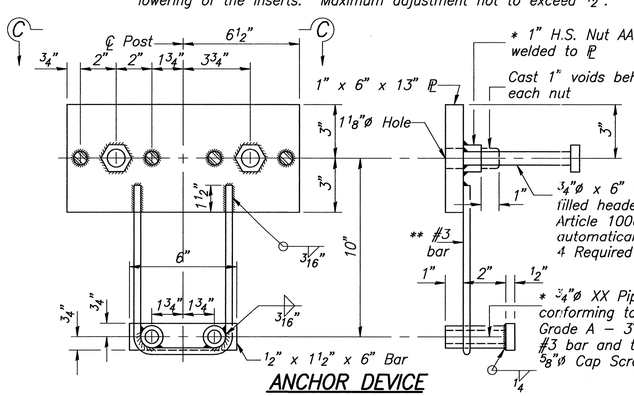

ANCHOR DEVICE
* Threaded areas shall be plugged or blocked off during casting of beam.

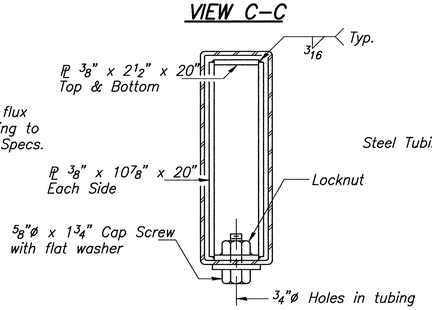

SECTION AT RAIL SPLICE

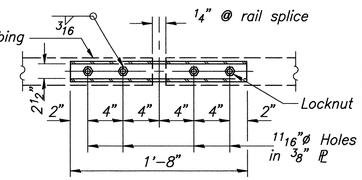

PLAN-BOTT. SPLICE PL TYPICAL

NOTES

Hollow structural steel tubing shall conform to the requirements of ASTM designation A500 Grade B Structural Steel Tubing and shall meet the longitudinal CVN requirements of 15 Ft.-Lbs. at 0°F.

All other steel shapes and plates shall conform to the requirements of AASHTO M 270, Grade 36 except posts and angles shall conform to AASHTO M 270, Grade 50.

Bolts, cap screws, and nuts shall conform to the requirement of ASTM designation A 307 except for high strength bolts, nuts and washers noted which shall conform to AASHTO M 164.

All bolts, nuts, cap screws, washers and lock washers shall be galvanized according to AASHTO M 232.

All posts, railing, rail splices, anchor devices, angles and spacers shall be galvanized after shop fabrication according to AASHTO M 111 and ASTM A 385. Galvanized rail shall not be painted.

Railing shall be according to Section 509 of the Standard Specifications, except as noted, and will be paid for at the contract unit price per foot for STEEL RAILING, TYPE S1.

All field drilled holes shall be coated with an approved zinc rich paint before erection.

The lower plate of the post spacer in contact with the concrete shall receive two coats of asphalt paint conforming to Section 1060.07 Type II or place 1/8" fabric bearing pad between the post spacer and concrete.

The 3/4"ø high strength bolts used to connect the 6 x 4 x 3/4 angles to the post shall be tightened according to Article 505.04(f)(2) of the Standard Specifications. The 1"ø high strength bolts connecting the angles to the concrete shall be tightened to a snug fit and given an additional 1/8 turn. The 5/8"ø cap screws in bottom of posts shall be tightened to a snug fit only.

Curled End Sections shall conform to the requirements of AASHTO M 180 Type 1, Class A.

BILL OF MATERIAL

Item	Unit	Quantity
Steel Railing, Type S1	Foot	270

SHEET TITLE: STEEL RAILING, TYPE S1

PROJECT: SECTION 03-00260-00-BR
COUNTY HIGHWAY 5
CLARK COUNTY
STATION 10+00

PROJECT NO. 03007
SCALE
DATE 10-29-03
DRAWN BY MRL
CHECKED BY MCB

COOMBE-BLOXDORF P.C.
Engineers / Land Surveyors
Springfield, Illinois
Design Firm License No. 184-002703

DRAWING NO. 7 OF 10 SHTS

Rail.dwg