ROUTE NO.	SECTION	COUNTY	TOTAL SHEETS	SHEET NO.
C.H. 5	03-00260-00-BR	CLARK	10	6
FED. ROAD DIST. NO. 7		ILLINOIS	FED. AID PROJECT-	

91307

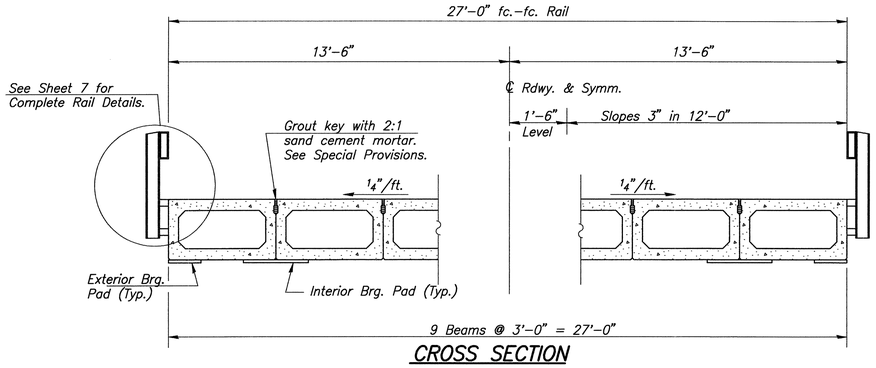

CROSS SECTION

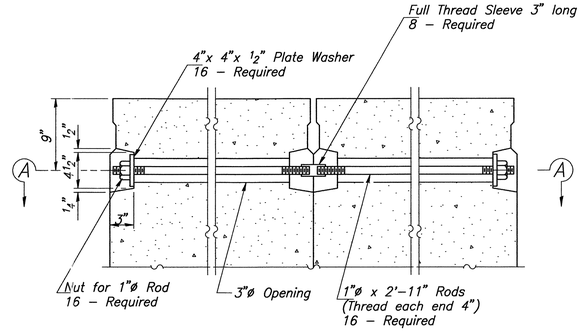

TRAVERSE TIE ROD DETAIL

NOTE: Omit key on exterior face of outside beams.

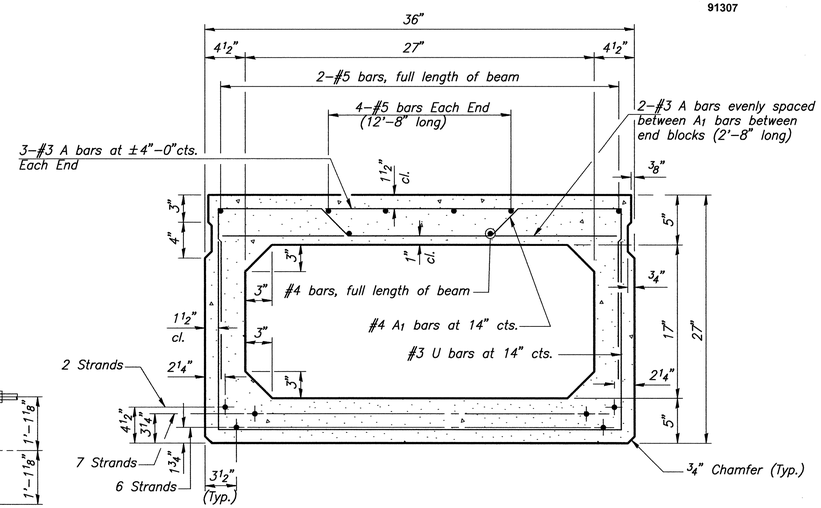

TYPICAL SECTION THRU BEAM

15- 1/2"ø Strands Stressed to 28,900 Lbs. Each Place strands symmetricaly about ℄ of beam. Use Standard Grid Pattern.

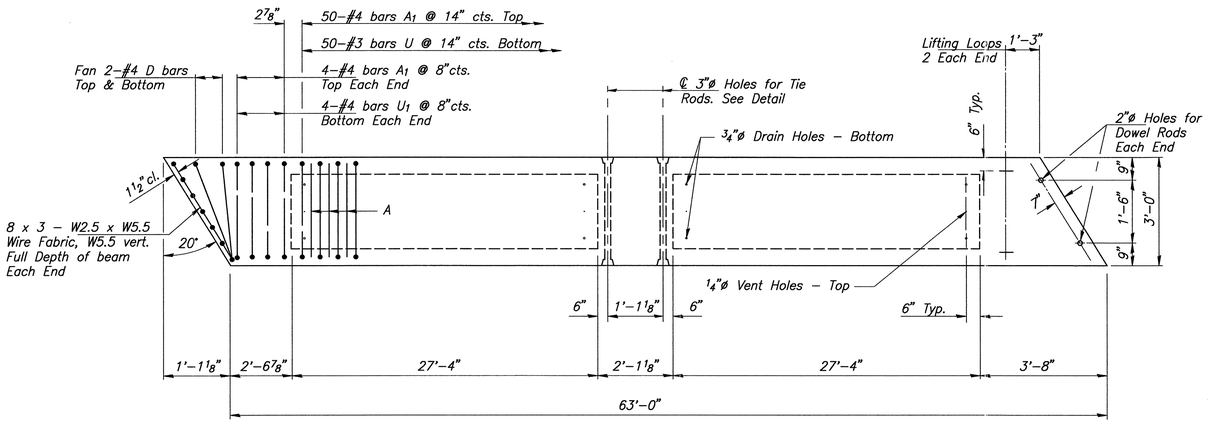

TYPICAL PLAN OF BEAMS

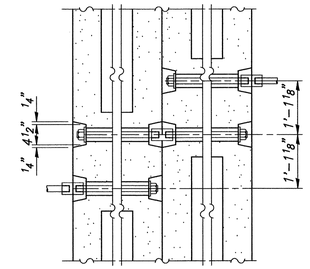

SECTION A-A

NOTES

Required release strength, f'_{ci}, shall be 4,000 p.s.i.

Prestressing steel shall be non-galvinized high strength, stress-relieved 7-wire strand, Grade 270.

The nominal diameter shall be 1/2" and the nominal cross-sectional area shall be 0.153 sq. in.

Lifting loops shall be 7-wire stress-relieved, 2-1/2"ø - 270 ksi strands.

The 1"ø rods in the transverse tie assembly shall be tightened to a snug fit and the threads set.

Pockets that receive tie rods on outside shall be filled with grout after ties are in place.

Reinforcement bars shall conform to AASHTO: M 31 or M 322, Grade 60.

The bearing seat surfaces shall be adjusted by shimming to assure firm and even bearing. Two 1/8" fabric adjusting shims of the dimensions of the Exterior Bearing Pad shall be provided for each bearing.

Keyway surfaces shall be cleaned to remove form oil and other bond breaking material prior to shipment of the beams. Cleaning shall be done by sandblasting the keyway areas between top of the beam and the bottom edge of the key.

An equal substitution of the low-relaxation strands for the stress-relieved strands will be permitted.

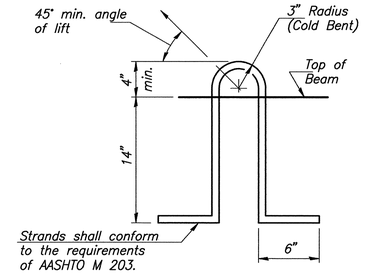

LIFTING LOOP DETAIL

Approved alternate may be substituted for the above.

Note:
The loop shall be formed in a manner such that all strands are engaged during lifting. Loops shall be burned off after beams have been erected.

BILL OF MATERIAL

Item	Unit	Quantity
Precast Prestressed Concrete Deck Beams (27" Depth)	Sq. Ft.	1,701

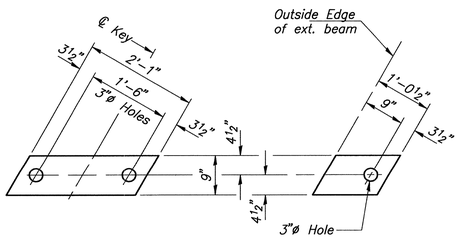

INTERIOR (16 Req'd.)

EXTERIOR (4 Req'd.)

BEARING PAD DETAIL

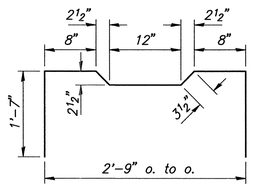

BAR A1

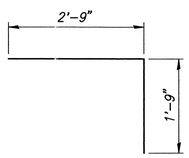

BAR D

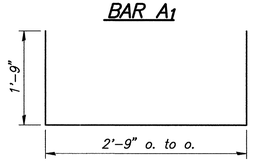

BARS U1 & U

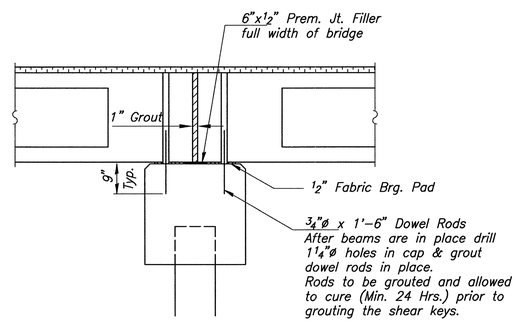

SECTION AT PIERS

SHEET TITLE: SUPERSTRUCTURE-SPAN 2	
PROJECT: SECTION 03-00260-00-BR COUNTY HIGHWAY 5 CLARK COUNTY STATION 10+00	PROJECT NO. 03007
	SCALE
	DATE 10-29-03
	DRAWN BY MRL
	CHECKED BY MCB
COOMBE-BLOXDORF P.C. Engineers / Land Surveyors Springfield, Illinois Design Firm License No. 184-002703	DRAWING NO. 6 OF 10 SHTS

Super2.DWG