JOB NO.	SECTION	COUNTY	TOTAL SHEETS	SHEET NO.
C-95-300-04	01-00022-00-BT	MACON	26	14
F.H.W.A. REG.	ILLINOIS	PROJECT: TE-00D5 (81)		

91304

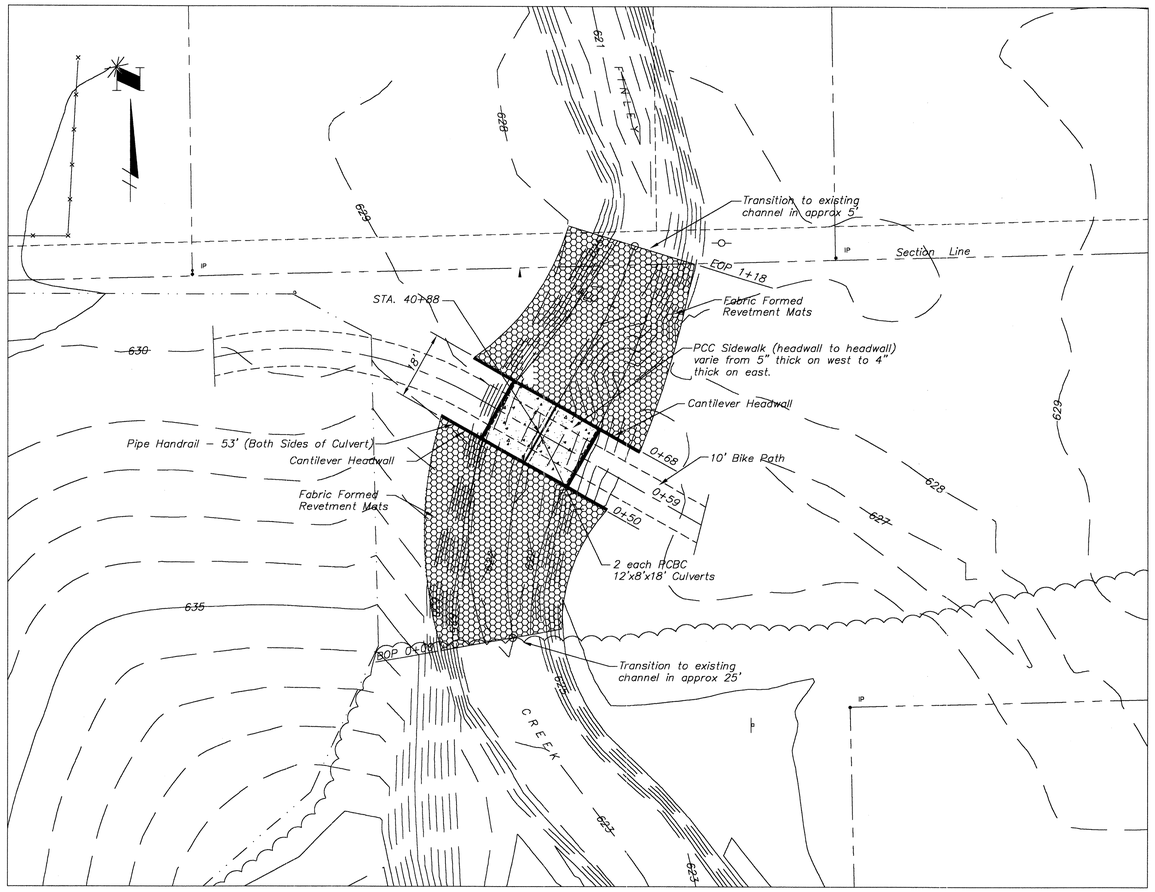

CULVERT PLAN
1" = 20'

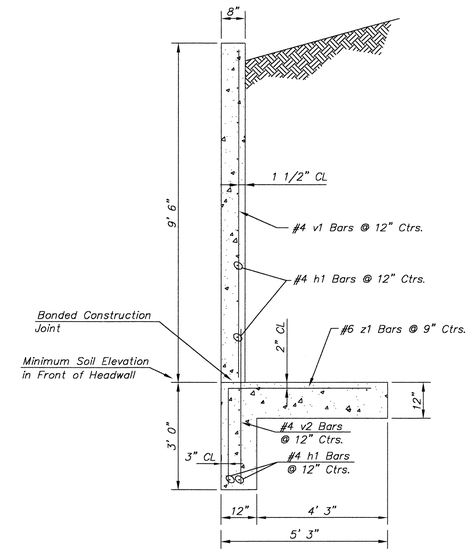

TYPICAL HEADWALL SECTION
1/2" = 1' 0"

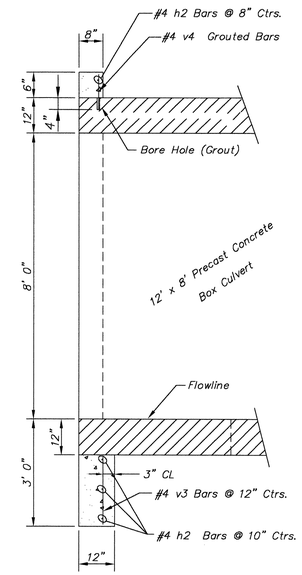

SECTION B
1/2" = 1' 0"

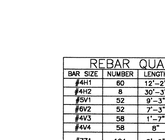

BAR z1

REBAR QUANTITIES

BAR SIZE	NUMBER	LENGTH	SHAPE	WEIGHT
#4H1	60	12'-2"	——	487
#4H2	8	30'-3"	——	162
#5V1	52	9'-3"	——	502
#6V2	52	7'-3"	——	566
#4V3	58	1'-7"	——	61
#4V4	58	8"	——	26
#7Z1	104	9'-0"	4"±4"	1913
TOTAL WEIGHT 3,717 LBS. *				
CONCRETE QUANTITY 36 CU. YDS. *				

* BOTH HEADWALLS
* PAID AS BOX CULVERT END SECTION – 2 – EACH

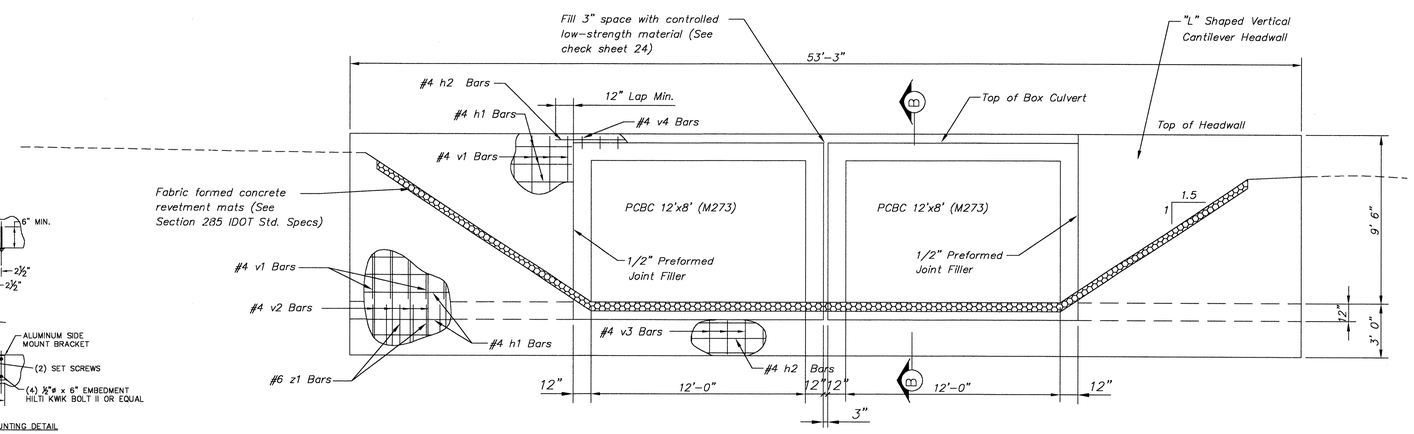

CULVERT CROSS SECTION
1/4" = 1' 0"

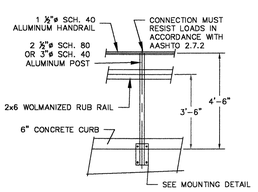

HANDRAIL DETAIL

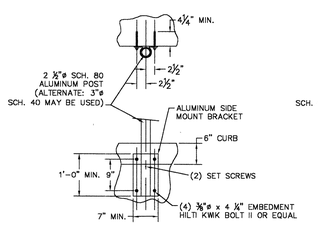

POST MOUNTING DETAIL

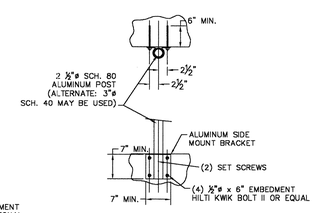

POST MOUNTING DETAIL

REVISIONS

NO.	BY	DATE

BATHRIDGE GEE MILAVSKI & ASSOCIATES, INC.
Consulting Engineers
1420 SOUTH TAYLORVILLE ROAD
DECATUR, ILLINOIS
Illinois License 184-001255

SCALE	DATE	JOB NO.
as noted	Jan 2003	01-090

DESIGNED	DRAWN	FIELD BOOK
MHP	p mills	XXX

VILLAGE OF MT ZION
FINLEY CREEK CULVERT
PLAN AND DETAILS

MICHAEL H. PRICE 31058 REGISTERED PROFESSIONAL ENGINEER OF ILLINOIS

by
date
expires Nov.30, 2003

SHEET NO. 14 OF 26

W:\MASSIE-BIKE-PATH\PLANANDDETAILS.DWG