ROUTE NO.	SECTION	COUNTY	TOTAL SHEETS	SHEET NO.
T.R. 1	01-15124-00-BR 00-01100-00-BR	SHELBY / EFFINGHAM	13	12
FED. ROAD DIST. NO.		ILLINOIS	FED. AID PROJECT BRGS-1731(23)	

91297

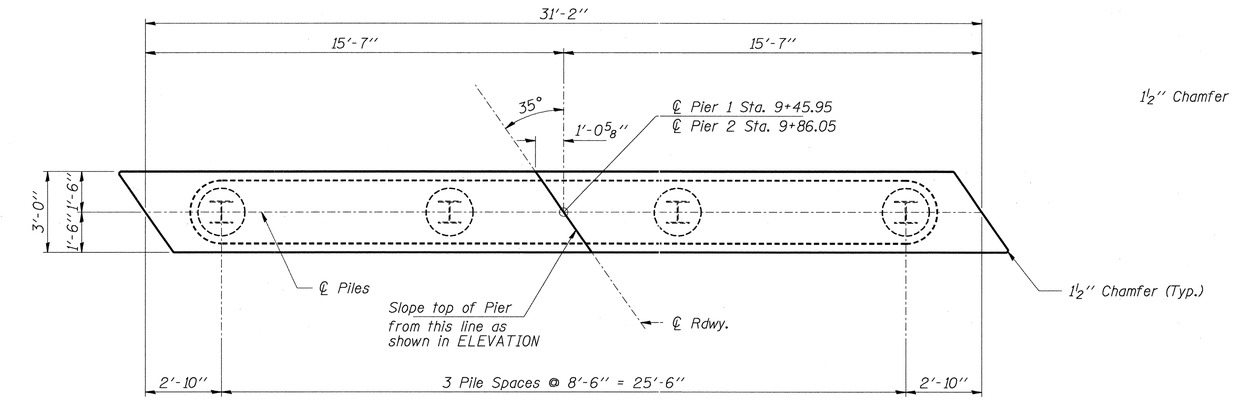

PLAN

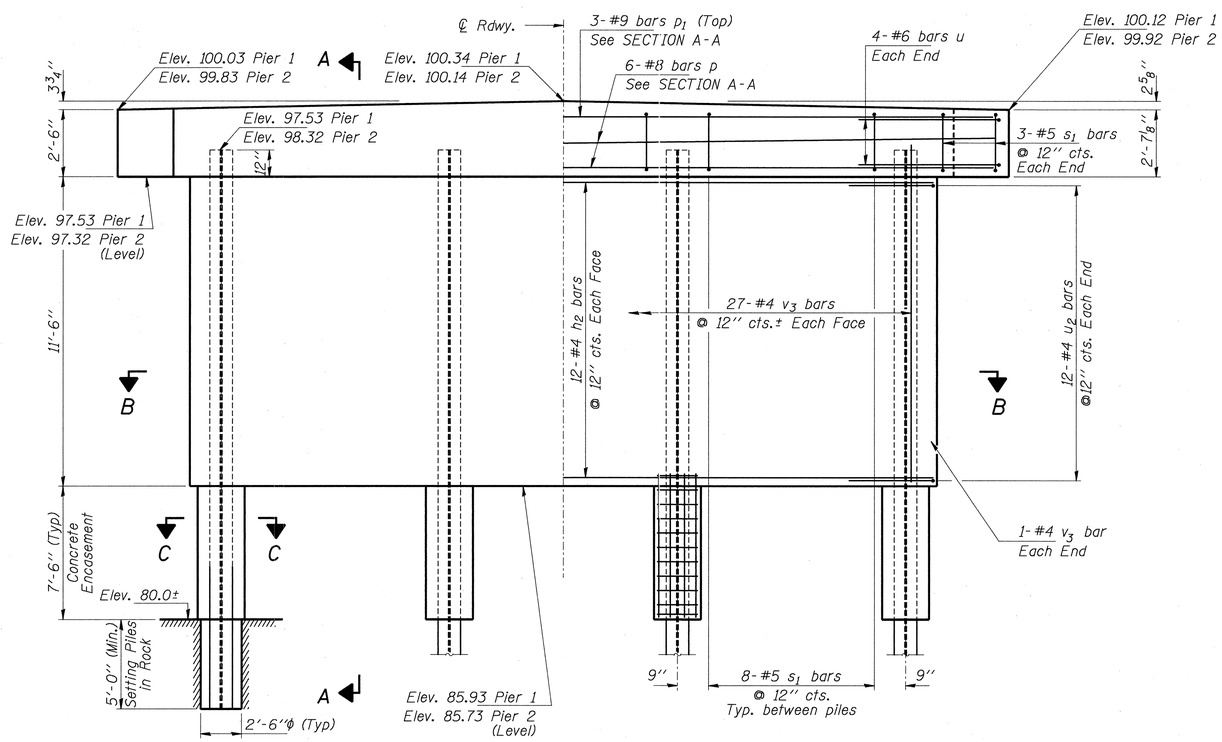

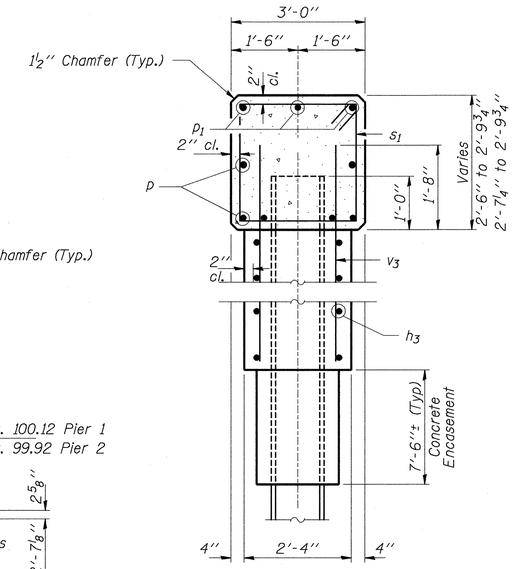

SECTION A-A

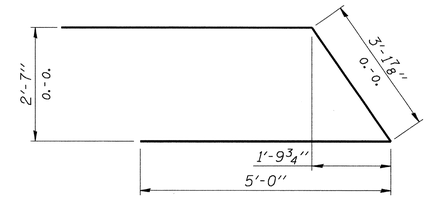

BAR u1

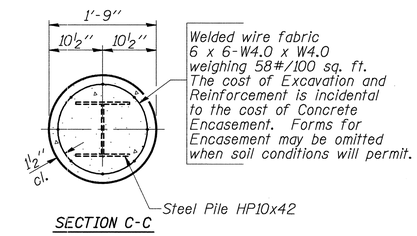

SECTION C-C

PILE ENCASEMENT DETAIL

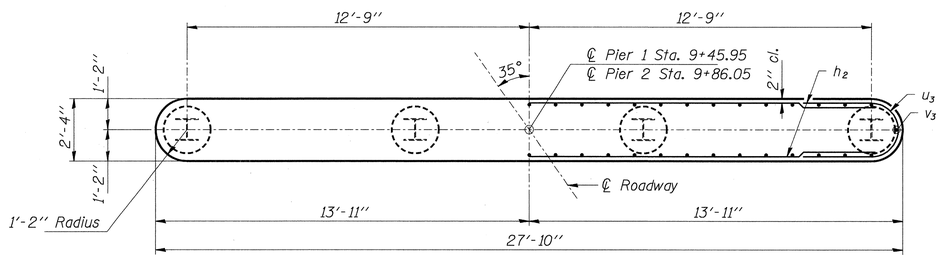

SECTION B-B

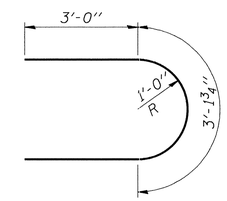

BAR u2

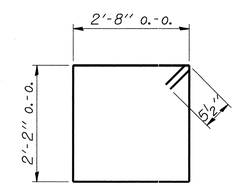

BAR s1

PILE DATA

Type _____ Steel HP10x42
No. Req'd. (2 Piers) ___ 8*
Capacity _____ 55 Tons/Pile
Est. Length _____ 25 Feet/Pile

* To be set in Sound Rock a minimum 5'-0" depth. See Special Provisions.

BILL OF MATERIAL - 2 PIERS

BAR	NO.	SIZE	LENGTH	SHAPE
h_2	48	#4	26'-0"	
p	12	#8	30'-10"	
p_1	6	#9	30'-10"	
s_1	60	#5	10'-7"	
u_1	16	#6	13'-2"	
u_2	48	#4	9'-2"	
v_3	112	#4	13'-0"	
Concrete Structures			Cu. Yd.	73.0
Reinforcement Bars			Pound	4,700
Steel Piles HP10x42			Foot	200
Underwater Structure Exc. Protection Location 1			Each	1
Underwater Structure Exc. Protection Location 2			Each	1
Concrete Encasement			Cu. Yd.	5.2
Setting Piles in Rock			Each	8

HLR
Rice, Berry and Associates
A Division of Hampton, Lenzini and Renwick, Inc.
Civil & Structural Engineers
801 S. Durkin Drive
Springfield, Illinois 62704
217-546-3400
608 1/2 Eastgate Dr.
Carbondale, Illinois 62901
618-457-1116
Account Number 12-87-0012-1
Date: 9-22-03

DESIGNED: C.J.B. | CHECKED: M.G.B. | DRAWN: D.T.M.

PIERS

SECTION 01-15124-00-BR / 00-01100-00-BR

PRAIRIE / BANNER ROAD DISTRICT

SHELBY / EFFINGHAM COUNTY

STATION 9+66

g:\DGN\P\12870012\B7012SUB.dgn 09/22/2003 02:43:59 PM