ROUTE NO.	SECTION	COUNTY	TOTAL SHEETS	SHEET NO.
T.R. 1	01-15124-00-BR 00-01100-00-BR	SHELBY / EFFINGHAM	13	11
FED. ROAD DIST. NO.		ILLINOIS	FED. AID PROJECT BROS-173(123)	

91297

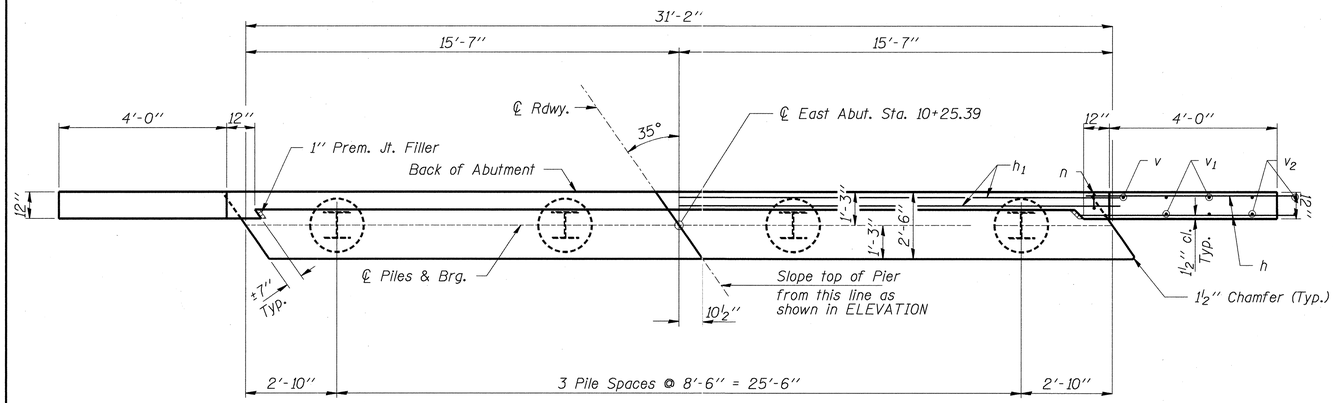

PLAN

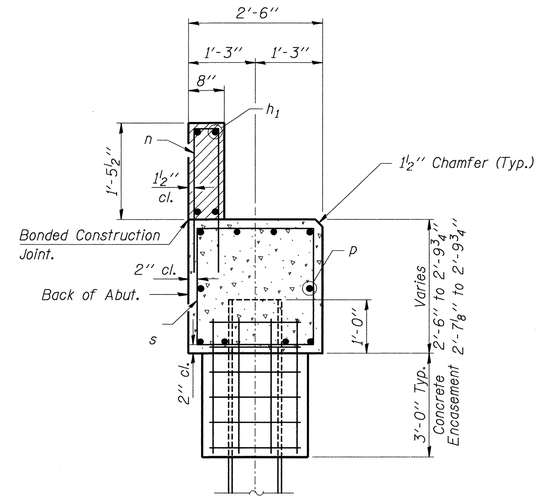

SECTION A-A

Hatched area to be poured after beams are in place.

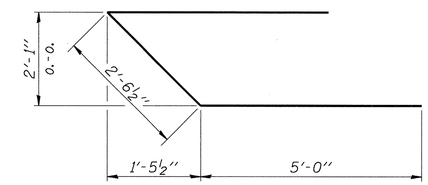

BAR u

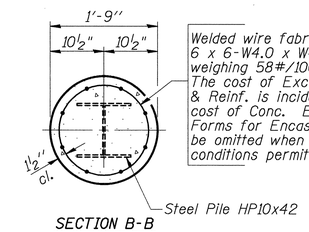

Welded wire fabric 6 x 6-W4.0 x W4.0 weighing 58#/100 sq. ft. The cost of Excavation & Reinf. is incidental to the cost of Conc. Encasement. Forms for Encasement may be omitted when soil conditions permit.

SECTION B-B

PILE ENCASEMENT DETAIL

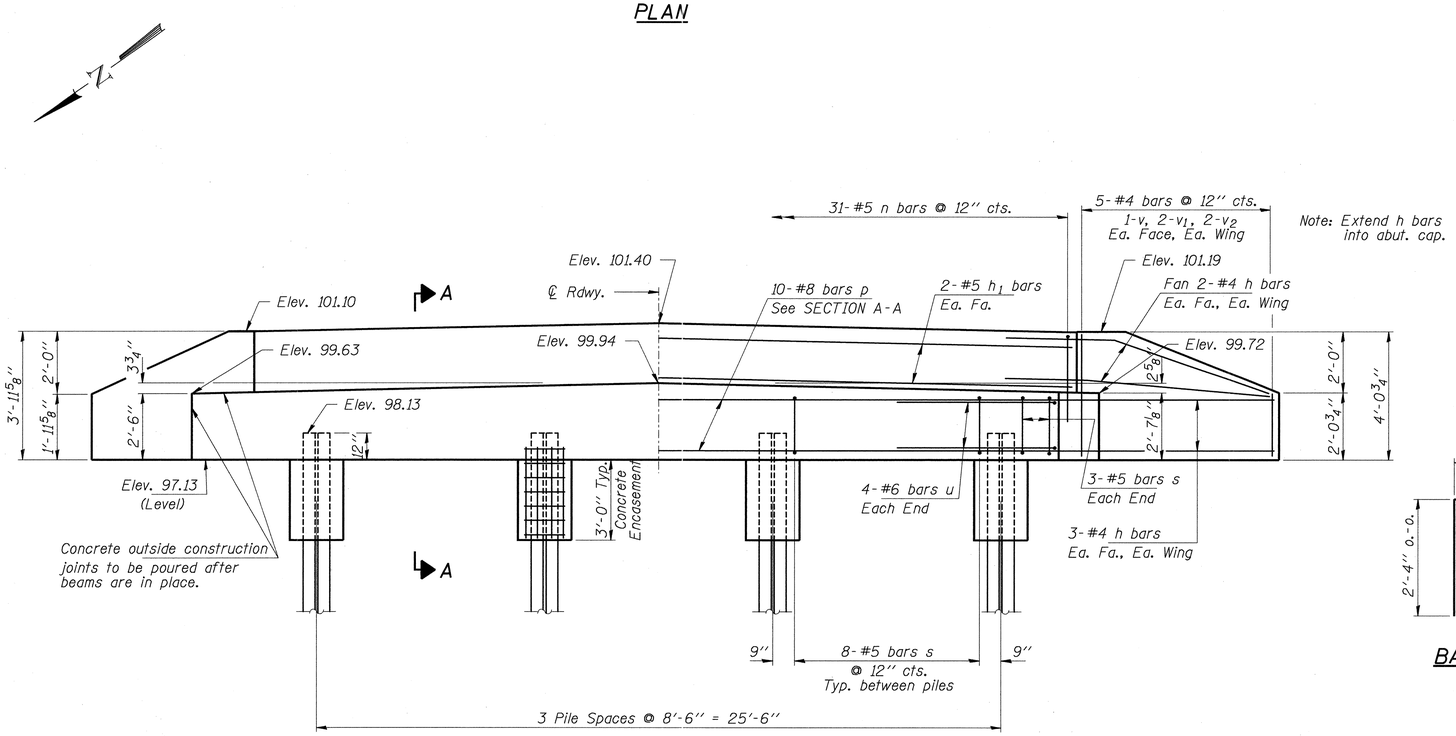

ELEVATION

(Looking East)

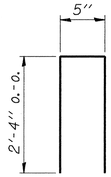

BAR n

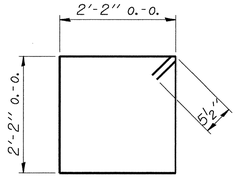

BAR s

BILL OF MATERIAL - E. ABUT.

BAR	NO.	SIZE	LENGTH	SHAPE
h	20	#4	5'-9"	
h_1	4	#4	31'-2"	
n	31	#4	5'-1"	
p	10	#6	30'-10"	
s	30	#5	9'-7"	
u	8	#6	12'-7"	
v	4	#4	4'-3"	
v_1	8	#4	3'-3"	
v_2	8	#4	1'-9"	
Concrete Structures			Cu. Yd.	10.0
Reinforcement Bars			Lbs.	1,220
Steel Piles HP10x42			Foot	100
Concrete Encasement			Cu. Yd.	1.0

PILE DATA

Type_____Steel HP10x42
No. Req'd. (1 Abut.)_____4
Capacity_____31 Tons/Pile
Estimated Lengths_____25 Feet/Pile

Rice, Berry and Associates
A Division of Hampton, Lenzini and Renwick, Inc.
Civil & Structural Engineers
801 S. Durkin Drive
Springfield, Illinois 62704
217-546-3400
608 ½ Eastgate Dr.
Carbondale, Illinois 62901
618-457-1116

Account Number 12-87-0012-1
Date: 9-22-03

DESIGNED: C.J.B. | CHECKED: S.W.M. | DRAWN: D.T.M.

EAST ABUTMENT

SECTION 01-15124-00-BR / 00-01100-00-BR

PRAIRIE / BANNER ROAD DISTRICT

SHELBY / EFFINGHAM COUNTY

STATION 9+66

g:\DGN\P\12870012\B7012SU6.dgn 09/22/2003 02:41:53 PM