ROUTE NO.	SECTION	COUNTY	TOTAL SHEETS	SHEET NO.
F.A.U. 7354 C.H. 39	01-00158 -00-BR	MACON	13	13
FED. ROAD DIST. NO.		ILLINOIS	PROJECT BRS-115(48)	

91296

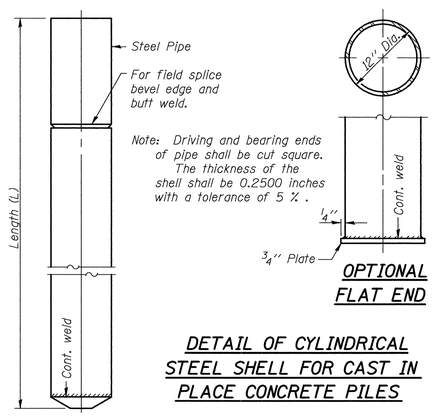

OPTIONAL FLAT END

DETAIL OF CYLINDRICAL STEEL SHELL FOR CAST IN PLACE CONCRETE PILES

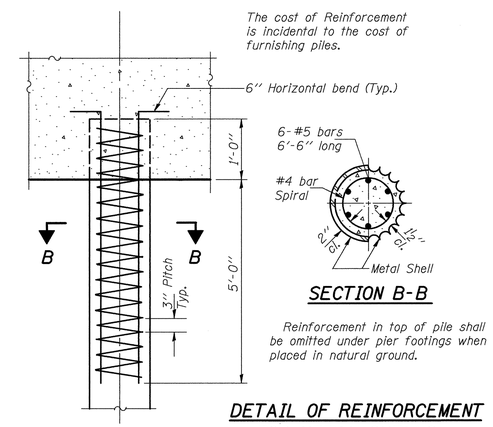

SECTION B-B

Reinforcement in top of pile shall be omitted under pier footings when placed in natural ground.

DETAIL OF REINFORCEMENT FOR METAL SHELLS

PILE DETAILS

Date	Designed DCS	C.H. 39 OVER SPRING CREEK SECTION 01-00158-00-BR MACON COUNTY STA. 14+97.45 PROP. STR. NO. 058-3359	Sheet No.
Revisions	Drawn BKN		5
	Checked DCS		of 5
	Approved KWB		
Prepared by:	URS 3040 North University Avenue Decatur, Il. 62526		WVP Job No. 2100001426.01