ROUTE NO.	SECTION	COUNTY	TOTAL SHEETS	SHEET NO.
FAU7354 C.H. 39	01-00158-00-BR	MACON	13	12
FED. ROAD DIST. NO.		ILLINOIS	PROJECT BRS-115(48)	

91296

NOTES

1. The Backwall and the portion of the Wingwalls above the bonded construction joint shall be cast against the in-place beam.
2. 1" dia. x 2'-6" dowel rods in 1½" dia. holes drilled in cap (2 each beam). Dowel rods to be grouted after beams are in place and allowed to cure (min. 24 hrs.) prior to grouting the shear keys. The grout shall be an approved non-shrink grout.
3. Reinforcement bars designated (E) shall be Epoxy Coated.

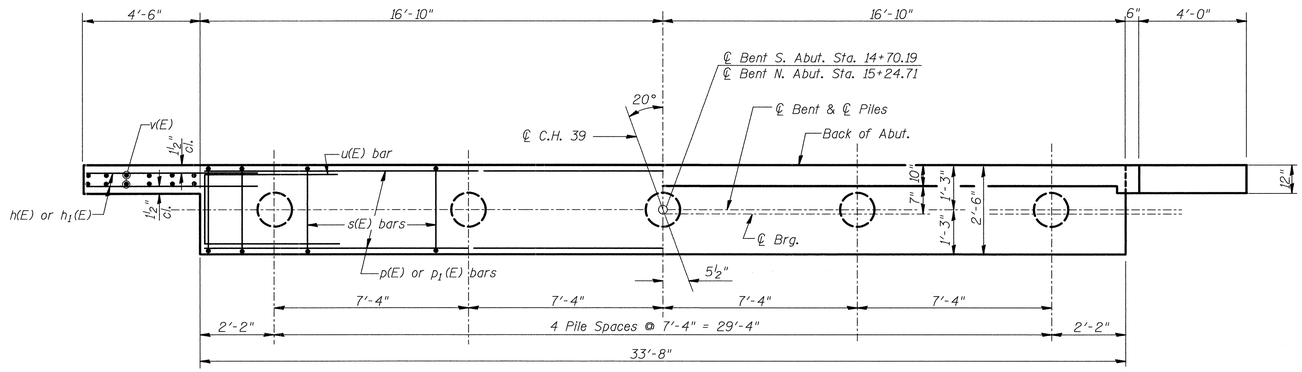

PLAN

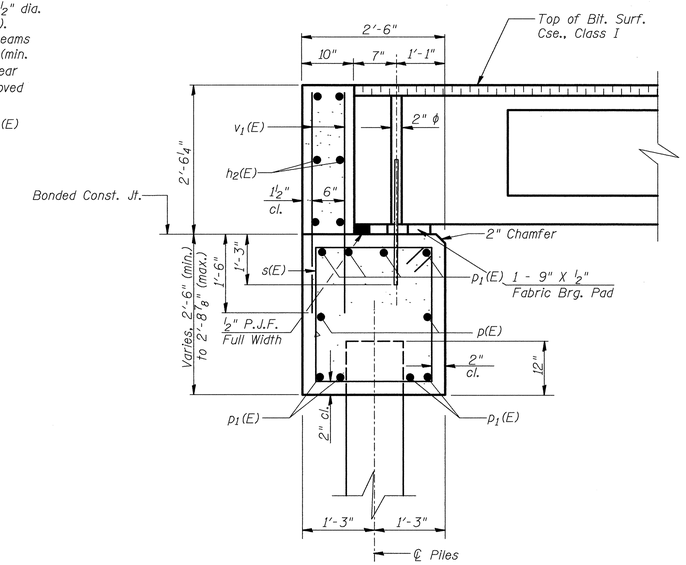

SECTION THRU ABUT.

(At Rt. Angles)

PILE DATA

Type: Metal Pile Shells 12"
Capacity: 40 Tons
Estimated Length: N. Abut. = 46'-0"
S. Abut. = 49'-0"
No. Required: N. Abut. = 5
S. Abut. = 4 plus one permanent test pile

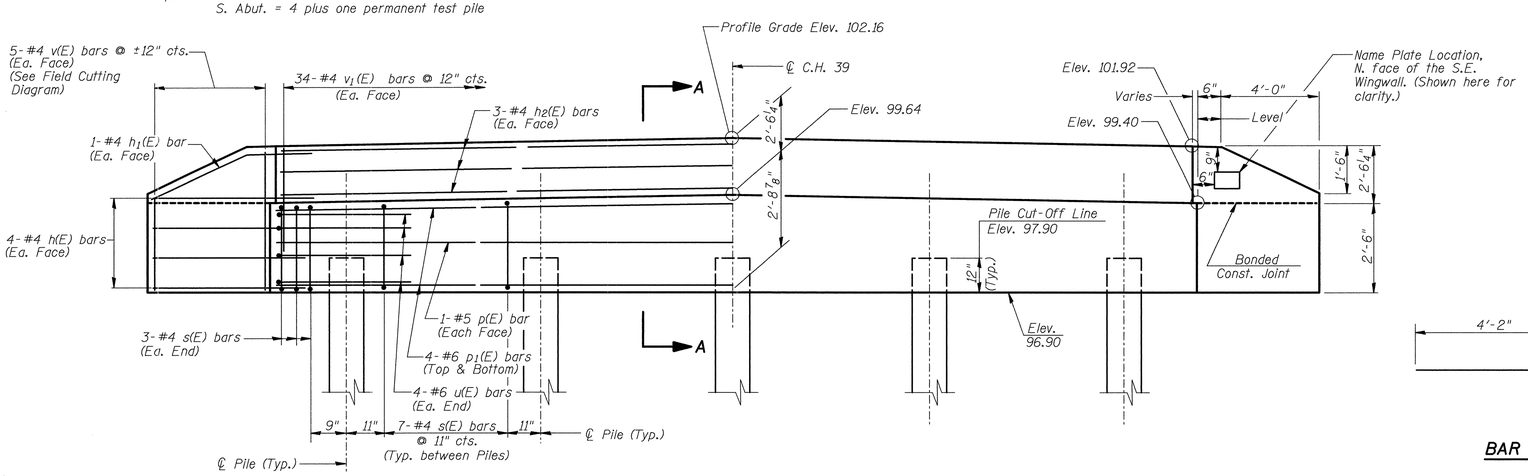

ELEVATION

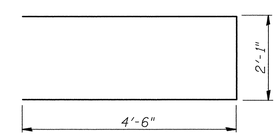

BAR u(E)

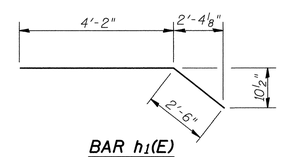

BAR h1(E)

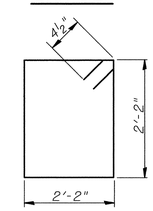

BAR s(E)

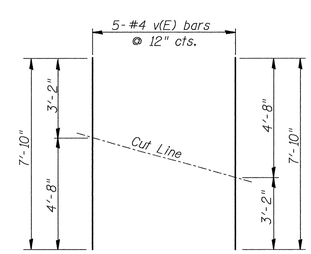

FIELD CUTTING DIAGRAM

Order bars full length. Cut to fit as shown and use remainder of bars in other face.

BILL OF MATERIAL
NORTH ABUTMENT & SOUTH ABUTMENT

Bar	No.	Size	Length	Shape
h(E)	32	#4	6'-6"	
h1(E)	8	#4	6'-8"	
h2(E)	12	#4	33'-4"	
p(E)	4	#5	33'-4"	
p1(E)	16	#6	33'-4"	
s(E)	68	#4	9'-5"	
u(E)	16	#6	11'-1"	
v(E)	20	#4	7'-10"	
v1(E)	136	#4	3'-10"	
Concrete Structures			Cu. Yd.	24.4
Reinforcement Bars, Epoxy Coated			Pound	2530
Metal Pile Shells 12"			Foot	426
Test Pile Metal Shells 12"			Each	1

NORTH ABUTMENT & SOUTH ABUTMENT

Date	Designed DCS	C.H. 39 OVER SPRING CREEK SECTION 01-00158-00-BR MACON COUNTY STA. 14+97.45 PROP. STR. NO. 058-3359	Sheet No. 4 of 5
Revisions	Drawn BKN		
	Checked DCS		
	Approved KWB		
Prepared by: URS	3040 North University Avenue Decatur, Il. 62526		WVP Job No. 2100001426.01