ROUTE NO.	SECTION	COUNTY	TOTAL SHEETS	SHEET NO.
FAU7354 C.H. 39	01-00158 -00-BR	MACON	13	10
FED. ROAD DIST. NO.		ILLINOIS	PROJECT BRS-1(548)	

91296

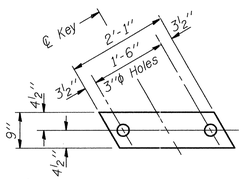

½" FABRIC BEARING PAD
(Interior-Fixed)

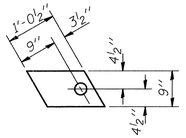

½" FABRIC BEARING PAD
(Exterior-Fixed)

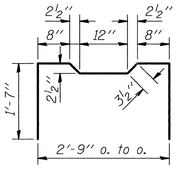

BAR A_1

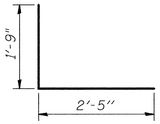

BAR D

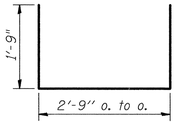

BARS U & U_1

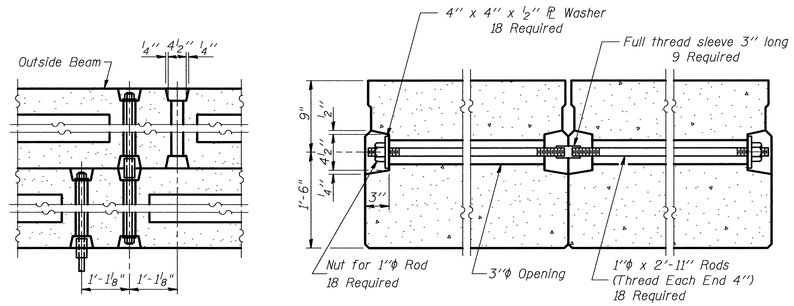

TYPICAL TRANSVERSE TIE ASSEMBLY

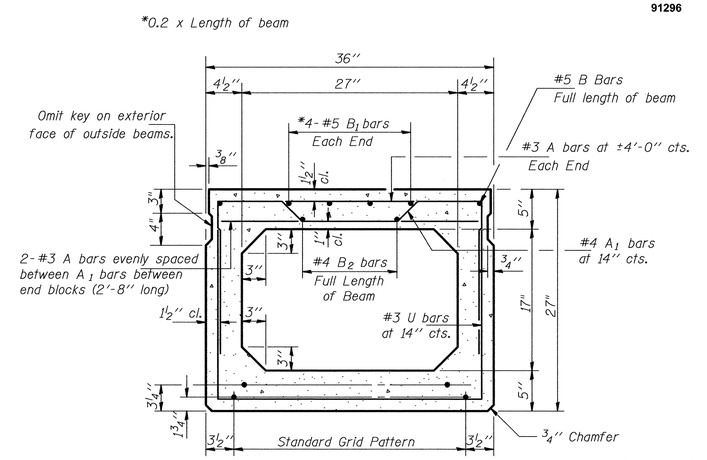

TYPICAL SECTION

12-½"φ Strands Each Strand Stressed to 28,900 Lbs.
8-Strands 1¾" up, 4-Strands 3¼" up.

Note: Place strands symmetrically about ℄ of beam.

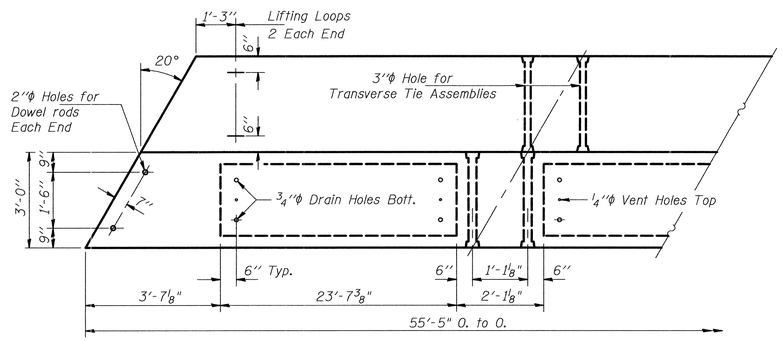

PLAN

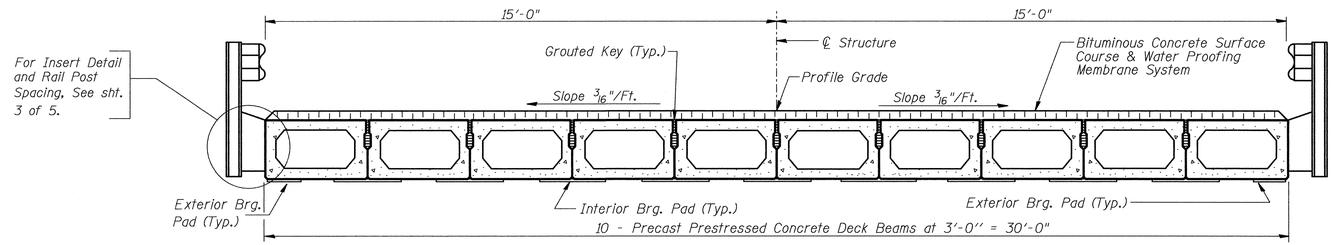

CROSS SECTION

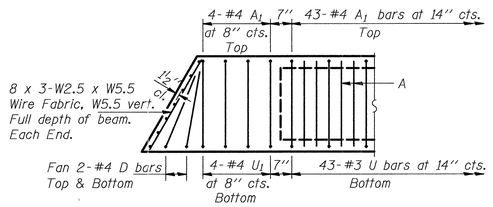

END PLAN

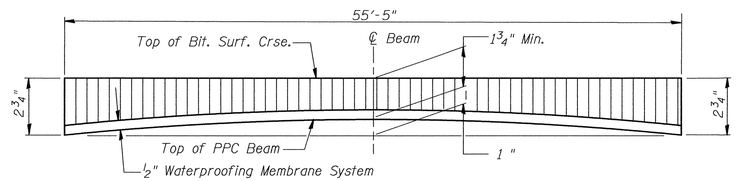

ANTICIPATED CAMBER DIAGRAM

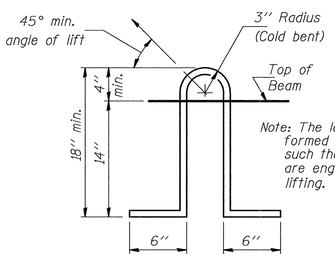

Note: The loop shall be formed in a manner such that all strands are engaged during lifting.

STRANDS

LIFTING LOOP DETAIL

NOTES

Prestressing steel shall be uncoated high strength, stress-relieved 7-wire strand, Grade 270.
The nominal diameter shall be ½" and the nominal cross-sectional area shall be 0.153 sq. in.
Lifting loops shall be 2 -½" φ-270 ksi strands, as shown.
The 1" φ rods in the Transverse tie assembly shall be tightened to a snug fit and the threads set. Pockets that receive transverse tie bar on outside shall be filled with grout after transverse tie assembly is in place.
Reinforcement bars shall conform to the requirements of AASHTO M-31, M-42 or M-53 Grade 60.
The bearing seat surfaces shall be adjusted by shimming to assure firm and even bearing. Two ⅛" fabric adjusting shims of the dimensions of the Exterior Bearing Pad shall be provided for each bearing.
Keyway surfaces shall be cleaned to remove form oil or other bond breaking material prior to shipment of the beams. Cleaning shall be done by sandblasting the keyway areas between top of the beam and the bottom edge of the key.
Required Release Strength, f'ci, shall be 4000 p.s.i.
An equal substitution of the low-relaxation strands for the stress relieved strands will be permitted.
A Calcium Nitrite Corrosion Inhibitor, as covered in the Special Provisions, shall be used in the concrete for precast prestressed concrete deck beams.

BILL OF MATERIAL

Bar	No.	Size	Length	Shape
Precast Prestressed Conc. Deck Bms. (27" Depth)			Sq. Ft.	1663

SUPERSTRUCTURE

Date			
Revisions	Designed DCS	C.H. 39 OVER SPRING CREEK SECTION 01-00158-00-BR MACON COUNTY STA. 14+97.45 PROP. STR. NO. 058-3359	Sheet No. 2 of 5
	Drawn BKN		
	Checked DCS		
	Approved KWB		
Prepared by: URS	3040 North University Avenue Decatur, Il. 62526		WVP Job No. 2100001426.01