ROUTE NO.	SECTION	COUNTY	TOTAL SHEETS	SHEET NO.
T.R. 14	*	SHELBY	13	13
FED. ROAD DIST. NO. 7		ILLINOIS	PROJECT	
* 99-11117-00-BR			SHEET 4 OF 4	

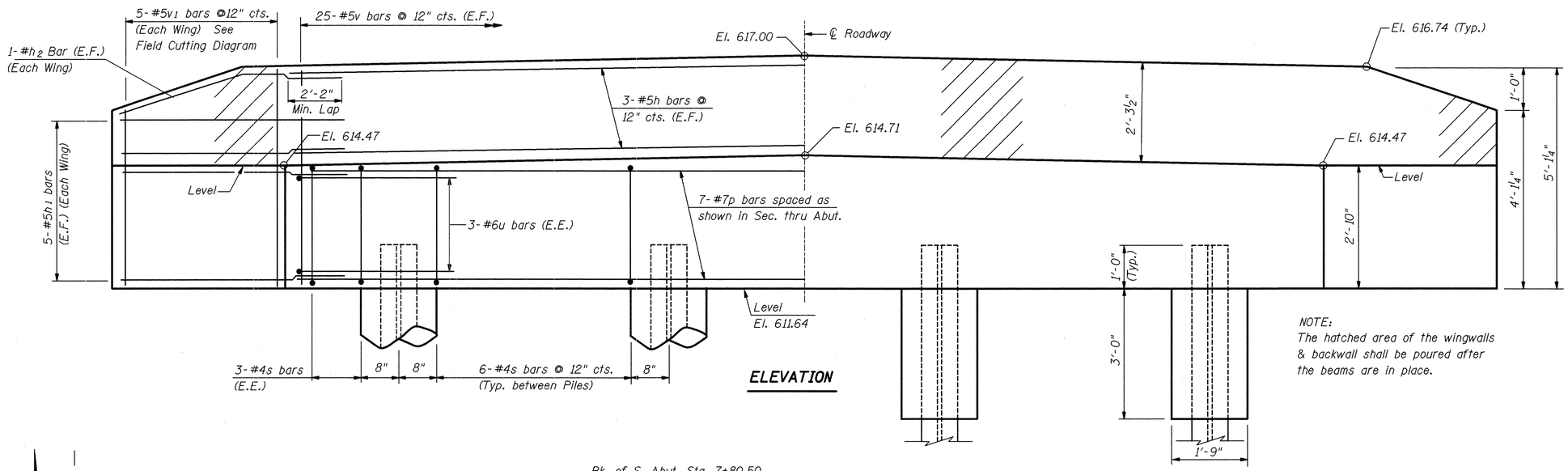

ELEVATION

NOTE:
The hatched area of the wingwalls & backwall shall be poured after the beams are in place.

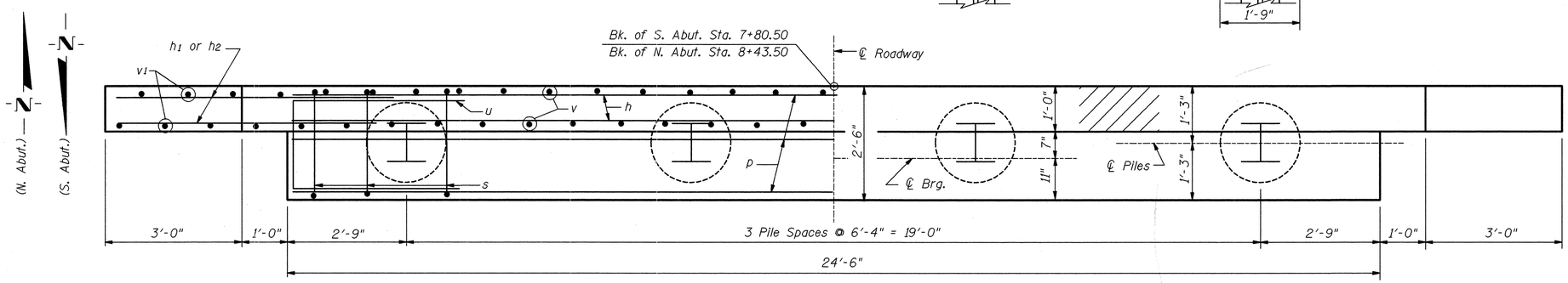

PLAN

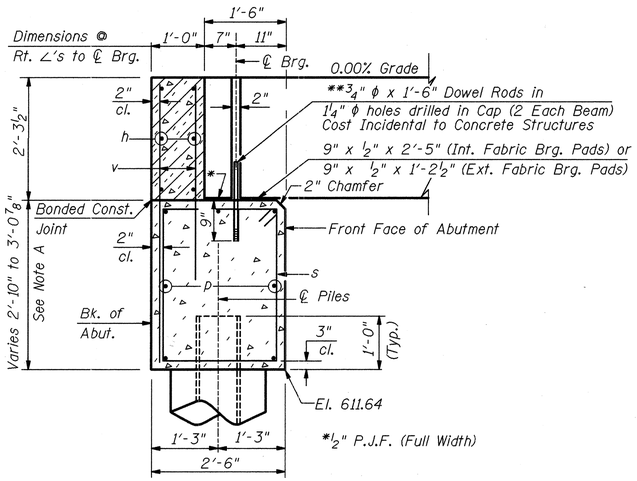

SECTION THRU ABUTMENT

** Dowel Rods to be grouted after beams are in place and prior to grouting the shear keys.

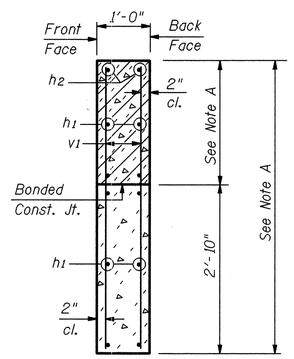

SECTION THRU WINGWALLS

NOTE A: See Elev. given on Elev. View

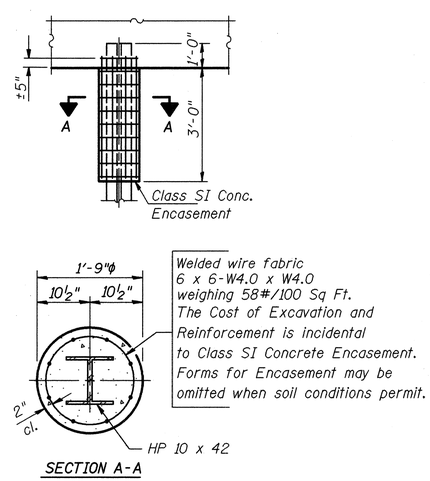

SECTION A-A

PILE ENCASEMENT DETAIL

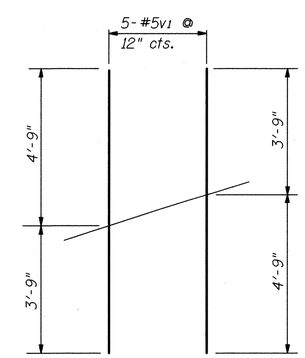

FIELD CUTTING DIAGRAM

Order v1 bars full length, cut to fit in field and place remainder in opposite face of wall.

BILL OF MATERIAL

91290

(2 Abutments)

Bar	No.	Size	Length	Shape
h	12	#5	24'-0"	
h1	40	#5	6'-6"	
h2	8	#5	6'-6"	
p	14	#7	24'-0"	
s	48	#4	9'-11"	
u	12	#6	7'-3"	
v	100	#5	4'-3"	
v1	20	#5	8'-6"	

ITEM	UNIT	QUANTITY
Reinforcement Bars	Pound	2380
Concrete Structures	Cu. Yd.	20.4
Furnishing Steel Piles, HP 10 x 42	Foot	204
Driving Steel Piles	Foot	204
Test Piles	Each	2
Structure Excavation	Cu. Yd.	56
Class SI Concrete Encasement	Cu. Yd.	2.1

PILE DATA

Type	=	Steel HP 10 x 42
Capacity	=	Drive to Refusal
Estimated Length	=	34' (Each Abut.)
Number Req'd.	=	8 (Including 1 Test Pile @ Each Abut.)

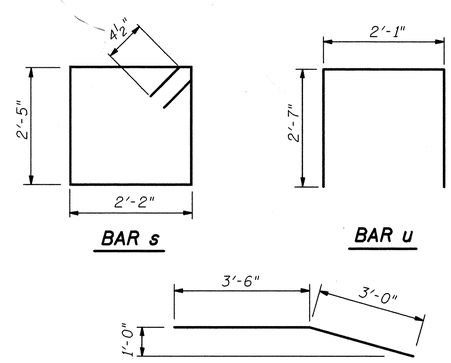

BAR s

BAR u

BAR h2

ABUTMENT DETAILS
T.R. 14 OVER MATNEY BRANCH
SEC. 99-11117-00BR
SHELBY COUNTY
S.N. 087-3517
STATION 8+12.00

ie consultants

DESIGNED: G.B.M. CHECKED: D.R.B.
DRAWN: J.P.H. DATE: October, 2003