ROUTE NO.	SECTION	COUNTY	TOTAL SHEETS	SHEET NO.
T.R. 14	*	SHELBY	13	11
FED. ROAD DIST. NO. 7		ILLINOIS	PROJECT	

* 99-11117-00-BR

SHEET 2 OF 4

91290

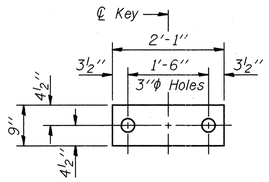

FABRIC BEARING PAD
(Interior)

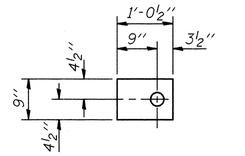

FABRIC BEARING PAD
(Exterior)

FIXED

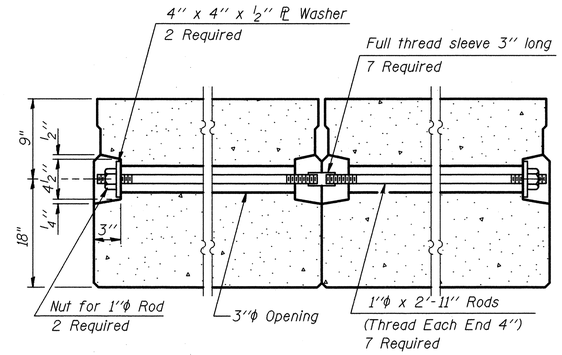

TYPICAL TRANSVERSE TIE ASSEMBLY

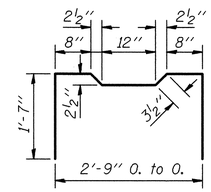

BAR A1

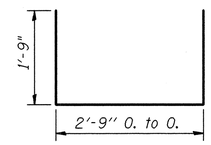

BARS U & U1

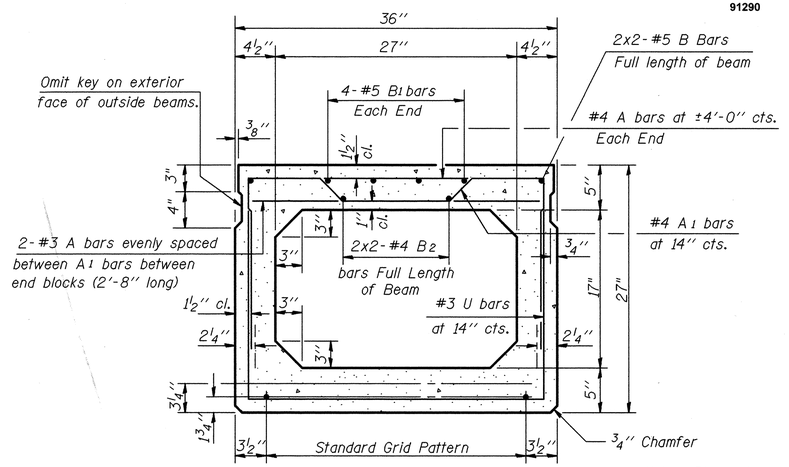

TYPICAL SECTION

16-½"φ Strands, Each Strand Stressed to 28,900 Lbs.
8-Strands 1¾" up, 6-Strands 3¼" up, 2 Strands 7½" up.

Note: Place strands symmetrically about ℄ of beam.

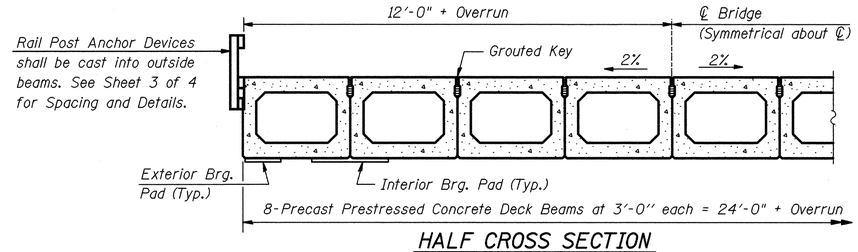

HALF CROSS SECTION

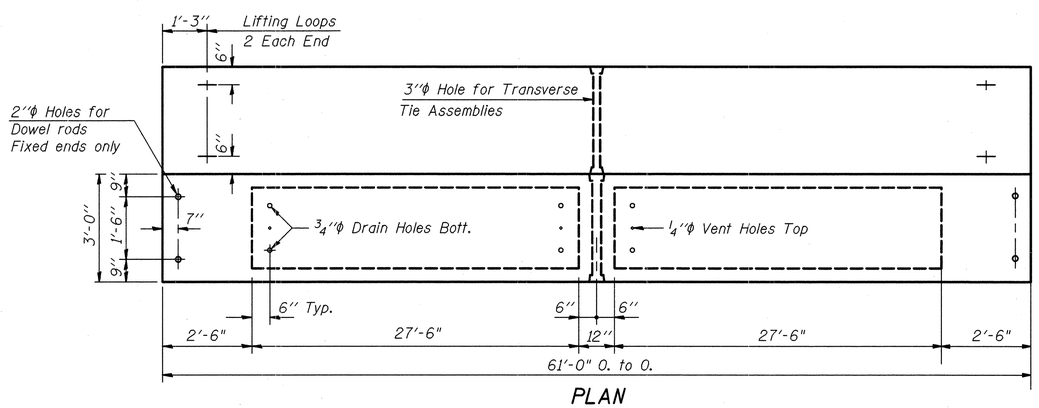

PLAN

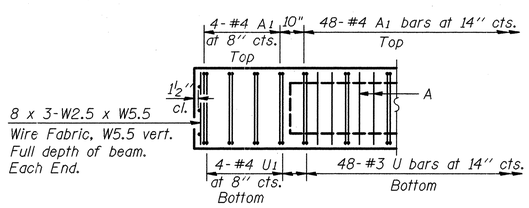

END ELEVATION

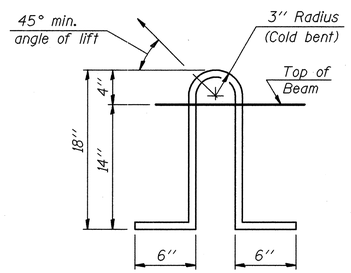

LIFTING LOOP DETAIL

BILL OF MATERIAL

Bar	No.	Size	Length	Shape
A	96	#3	2'-8"	—
A1	48	#4	6'-1"	⊓
B	4	#5	31'-6"	—
B1	8	#5	12'-3"	—
B2	4	#4	31'-3"	—
U	48	#3	6'-3"	⊓
U1	8	#4	6'-3"	⊓
Precast Prestressed Conc. Deck Bms.			Sq. Ft.	1464

NOTES

Prestressing steel shall be uncoated high strength, stress-relieved 7-wire strand, Grade 270. The nominal diameter shall be ½" and the nominal cross-sectional area shall be 0.153 sq. in.

Lifting loops shall be 2 -½"φ-270 ksi strands, as shown.

The 1"φ rods in the transverse tie assembly shall be tightened to a snug fit and the threads set. Pockets that receive transverse tie bar on outside shall be filled with grout after transverse tie assembly is in place.

Reinforcement bars shall conform to the requirements of AASHTO M-31, M-42 or M-53 Grade 60.

The bearing seat surfaces shall be adjusted by shimming to assure firm and even bearing. Two ⅛" fabric adjusting shims of the dimensions of the Exterior Bearing Pad shall be provided for each bearing.

Keyway surfaces shall be cleaned to remove form oil or other bond breaking material prior to shipment of the beams. Cleaning shall be done by sandblasting the keyway areas between top of the beam and the bottom edge of the key.

A Calcium Nitrite Corrosion Inhibitor, as covered in the Special Provisions, shall be used in the concrete for precast prestressed concrete deck beams.

Required Release Strength, f'ci, shall be 4000 p.s.i.

An equal substitution of the low-relaxation strands for the stress-relieved strands will be permitted.

P.P.C. DECK BEAM DETAILS
T.R. 14 OVER MATNEY BRANCH
SEC. 99-11117-00-BR
SHELBY COUNTY
S.N. 087-3517
STATION 8+12.00

ie consultants

DESIGNED: G.B.M. CHECKED: D.R.B.
DRAWN: J.P.H. DATE: October, 2003