F.A.U. RTE.	SECTION	COUNTY	TOTAL SHEETS	SHEET NO.
1467	2000-044TS	COOK	32	16
STA.		TO STA.		
FED. ROAD DIST. NO. 1	ILLINOIS	FED. AID PROJECT		

60948

CONTROLLER SEQUENCE

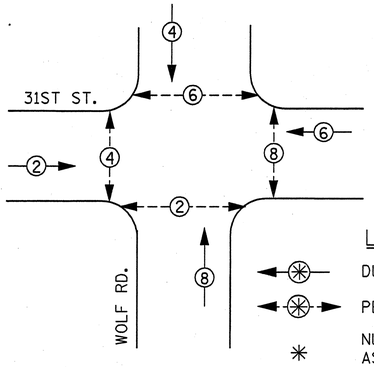

LEGEND

DUAL ENTRY PHASE

PEDESTRIAN PHASE

NUMBER REFERS TO ASSOCIATED PHASE

PHASE DESIGNATION DIAGRAM

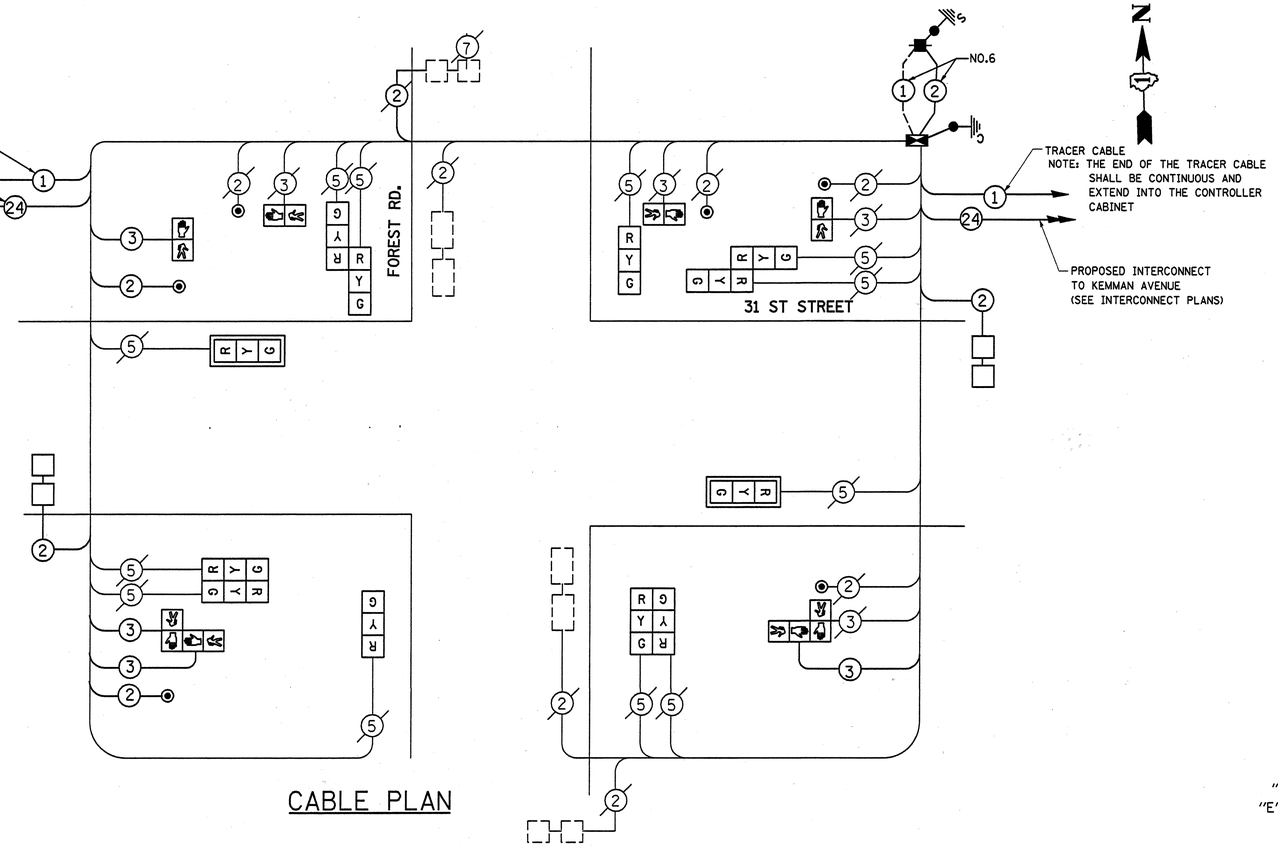

CABLE PLAN

CABLE PLAN LEGEND

EXISTING	PROPOSED	
		8" (200mm) TRAFFIC SIGNAL SECTION
		12" (300mm) TRAFFIC SIGNAL SECTION
		12" (300mm) PEDESTRIAN SIGNAL SECTION
		12" (300mm) PEDESTRIAN SIGNAL SECTION
		CONTROLLER CABINET
		SERVICE INSTALLATION
		TELEPHONE CONNECTION
		VEHICLE DETECTOR, INDUCTION LOOP
		MAGNETIC DETECTOR
		EMERGENCY VEHICLE LIGHT DETECTOR
		CONFIRMATION BEACON
		PUSHBUTTON DETECTOR
2	2	DENOTES NUMBER OF CONDUCTORS, ALL CABLE NO. 14 EXCEPT AS INDICATED. ALL LOOP DETECTOR CABLE TO BE SHIELDED.
1	1	GROUND CABLE IN CONDUIT NO. 6 SOLID COPPER (GREEN)
24	24	FIBER OPTIC CABLE IN CONDUIT NO. 62.5/125 MM12F SM12F
"P"	"P"	SIGNAL FACE WITH BACKPLATE, "P" INDICATES PROGRAMMED HEAD
"E"		RAILROAD CONTROL CABINET
"E"		ILLUMINATED SIGN, FIBER OPTIC "NO LEFT TURN"
"E"		ILLUMINATED SIGN, FIBER OPTIC "NO RIGHT TURN"
H/C	C	GROUND ROD AT HANDHOLE (H), DOUBLE HANDHOLE (H), OR CONTROLLER (C).
P	P	GROUND ROD AT POST (P), OR MAST ARM POLE (MA).
S	S	GROUND ROD AT ELECTRIC SERVICE INSTALLATION

THE FOLLOWING EXISTING TRAFFIC SIGNAL EQUIPMENT SHALL BE REMOVED BY THE CONTRACTOR, SHALL REMAIN THE PROPERTY OF THE STATE AND SHALL BE DELIVERED BY THE CONTRACTOR TO THE STATE'S TRAFFIC SIGNAL MAINTENANCE CONTRACTOR'S MAIN FACILITY AS PER THE TRAFFIC SIGNAL SPECIFICATION.

1 EACH CONTROLLER AND CABINET, COMPLETE

THE FOLLOWING ITEMS SHALL BE REMOVED BY THE CONTRACTOR AND SHALL BE DISPOSED OF BY THEM OUTSIDE OF THE RIGHT-OF-WAY AT THEIR EXPENSE. THE SALVAGE VALUE OF THE REMOVED EQUIPMENT SHALL BE REFLECTED IN THE CONTRACTOR BID PRICE.

12 EACH SIGNAL HEAD, 1 FACE, 3 SECTION
4 EACH PEDESTRIAN SIGNAL HEAD, 1-FACE
2 EACH TRAFFIC SIGNAL BACKPLATE
1 EACH SERVICE INSTALLATION

SCHEDULE OF QUANTITIES

QUANTITY	UNIT	ITEM
0.09	L SUM	TRAFFIC CONTROL AND PROTECTION, STANDARD 701501
0.09	L SUM	TRAFFIC CONTROL AND PROTECTION, STANDARD 701701
0.09	L SUM	TRAFFIC CONTROL AND PROTECTION, STANDARD 701801
1	EACH	MAINTENANCE OF EXISTING TRAFFIC SIGNAL INSTALLATION
1	EACH	PAINT EXISTING TRAFFIC SIGNAL EQUIPMENT
1	EACH	FULL-ACTUATED CONTROLLER AND TYPE V CABINET
6	EACH	PEDESRIAN PUSH-BUTTON
1	EACH	TRANSCEIVER-FIBER OPTIC
1	EACH	REMOVE EXISTING TRAFFIC SIGNAL EQUIPMENT
38	METER	CONDUIT PUSHED, 50MM DIA., GALVANIZED STEEL
15	METER	CONDUIT PUSHED, 65MM DIA., GALVANIZED STEEL
84.9	METER	ELECTRIC CABLE IN CONDUIT, SIGNAL NO. 14 2C
90.9	METER	ELECTRIC CABLE IN CONDUIT, SIGNAL NO. 14 3C
147.5	METER	ELECTRIC CABLE IN CONDUIT, SIGNAL NO. 14 5C
213.7	METER	ELECTRIC CABLE IN CONDUIT, LEAD-IN, NO. 14 1 PAIR
38	METER	DETECTOR LOOP, TYPE 1
1	EACH	MODIFY EXISTING TYPE "D" FOUNDATION
50.3	METER	ELECTRIC CABLE IN CONDUIT, SERVICE, NO. 6 2C
50.3	METER	ELECTRIC CABLE IN CONDUIT, GROUNDING, NO. 6 1C
44.2	METER	REMOVE ELECTRIC CABLE FROM CONDUIT

QUANTITY	UNIT	ITEM
4	EACH	PEDESTRIAN SIGNAL HEAD, LED, 1-FACE, BRACKET MOUNTED
2	EACH	PEDESTRIAN SIGNAL HEAD, LED, 2-FACE, BRACKET MOUNTED
4	EACH	INDUCTIVE LOOP DETECTOR
2	EACH	TRAFFIC SIGNAL BACKPLATE, LOUVERED, ALUMINUM
2	EACH	SIGNAL HEAD, LED, 1-FACE, 3-SECTION, MAST ARM MOUNTED
2	EACH	SIGNAL HEAD, LED, 1-FACE, 1-3 SECTION, BRACKET MOUNTED
4	EACH	SIGNAL HEAD, LED, 2-FACE, 2-3 SECTION BRACKET MOUNTED
1	EACH	SERVICE INSTALLATION, POLE MOUNT

I.D.O.T TRAFFIC SIGNAL INSTALLATION ELECTRICAL SERVICE REQUIREMENTS					TOTAL
TYPE	NO. LAMPS	* WATTAGE INCAND.	WATTAGE LED	* %OPERATION	WATTAGE
SIGNAL (RED)	12	135	17	0.50	102.00
(YELLOW)	12	135	25	0.25	75.00
(GREEN)	12	135	15	0.25	45.00
ARROW		135	12	0.10	
PED. SIGNAL	8	90	25	1.00	200.00
CONTROLLER	1	100	100	1.00	100.00
ILLUM. SIGN		84		0.05	
FLASHER				0.50	
ENERGY COSTS TO:				TOTAL =	522.00

ILLINOIS DEPARTMENT OF TRANSPORTATION
201 WEST CENTER COURT
SCHAUMBURG, ILLINOIS 60196-1096

ENERGY SUPPLY CONTACT: MIKE STEVENS
PHONE: 708-410-5117
COMPANY: COMMONWEALTH EDISON

FOUNDATION (DEPTH)	FT. (m)	CABLE SLACK	FT. (m)	VERTICAL	FT. (m)
TYPE A - POST	4 (1.2)	HANDHOLE	6.5 (2.0)	ALL FOUNDATIONS	3.5 (1.0)
D - CONTROLLER	4 (1.2)	DOUBLE HANDHOLE	13 (4.0)	MAST ARM (L) POLE	20'+L-2=
E - M. ARM POLE		SIGNAL POST	2 (1.0)		(6m+L-0.6m)=
24" (600mm)	10 (3.0)	CONTROLLER CAB.	1 (0.5)	BRACKET MOUNTED	13 (4.0)
30" (750mm)	15 (4.6)	FIBER OPTIC	13 (4.0)	PED. PUSHBUTTON	4 (1.2)
		ELECTRIC SERVICE	1 (0.5)	ELECTRIC SERVICE	13.5 (4.1)
		GROUND CABLE	1 (0.5)	SERVICE TO GROUND	13.5 (4.1)
				POST MOUNTED	6 (1.8)

REVISIONS NAME	DATE

ILLINOIS DEPARTMENT OF TRANSPORTATION
CABLE PLAN, PHASE DESIGNATION DIAGRAM, EMERGENCY VEHICLE PREEMPTION SEQUENCE AND SCHEDULE OF QUANTITIES

31ST STREET AT FOREST ROAD

SCALE: NONE
DATE: 12/11/2003
DRAWN BY: SM
DESIGNED BY: SM
CHECKED BY: DAD

12/12/2003
c:\projects\tll8800\tll8800aa.m32
BEACOMRD

10:20:51 12/12/2003