T NO. 76558

CONTRACT NO. 76558

F.A.P. RTE.	SECTION	COUNTY	TOTAL SHEETS	SHEET NO.
805	122-VBR-I	ST. CLAIR	58	58
STA.		TO STA.		
FED. ROAD DIST. NO.	ILLINOIS	FED. AID PROJECT		

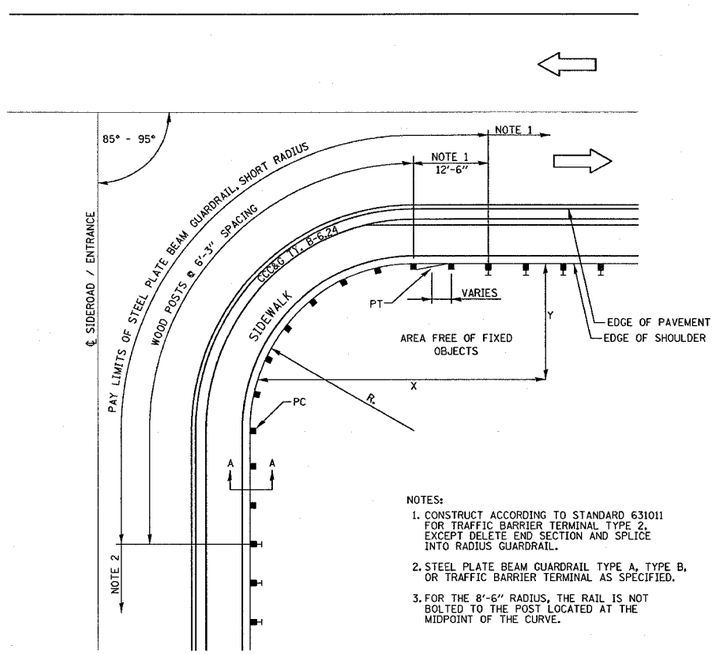

NOTES:

1. CONSTRUCT ACCORDING TO STANDARD 631011 FOR TRAFFIC BARRIER TERMINAL TYPE 2, EXCEPT DELETE END SECTION AND SPLICE INTO RADIUS GUARDRAIL.
2. STEEL PLATE BEAM GUARDRAIL TYPE A, TYPE B, OR TRAFFIC BARRIER TERMINAL AS SPECIFIED.
3. FOR THE 8'-6" RADIUS, THE RAIL IS NOT BOLTED TO THE POST LOCATED AT THE MIDPOINT OF THE CURVE.

PLAN VIEW SHORT RADIUS GUARDRAIL DETAIL

NOT TO SCALE

INSTALLATION CHARACTERISTICS PER DESIGN RADIUS			
R	NO. OF WOOD POSTS	X	Y
8'-6"	5 (NOTE 3)	25'	15'
17'-0"	6	30'	15'
25'-6"	8	40'	20'
35'-0"	11	50'	20'

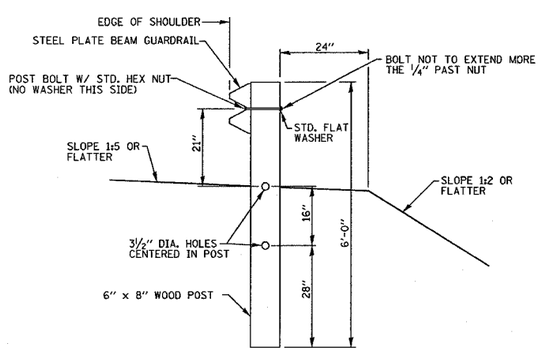

SECTION A-A

NOT TO SCALE

DETAIL OF EROSION TREATMENT ALONG GUARDRAIL IN NW QUADRANT

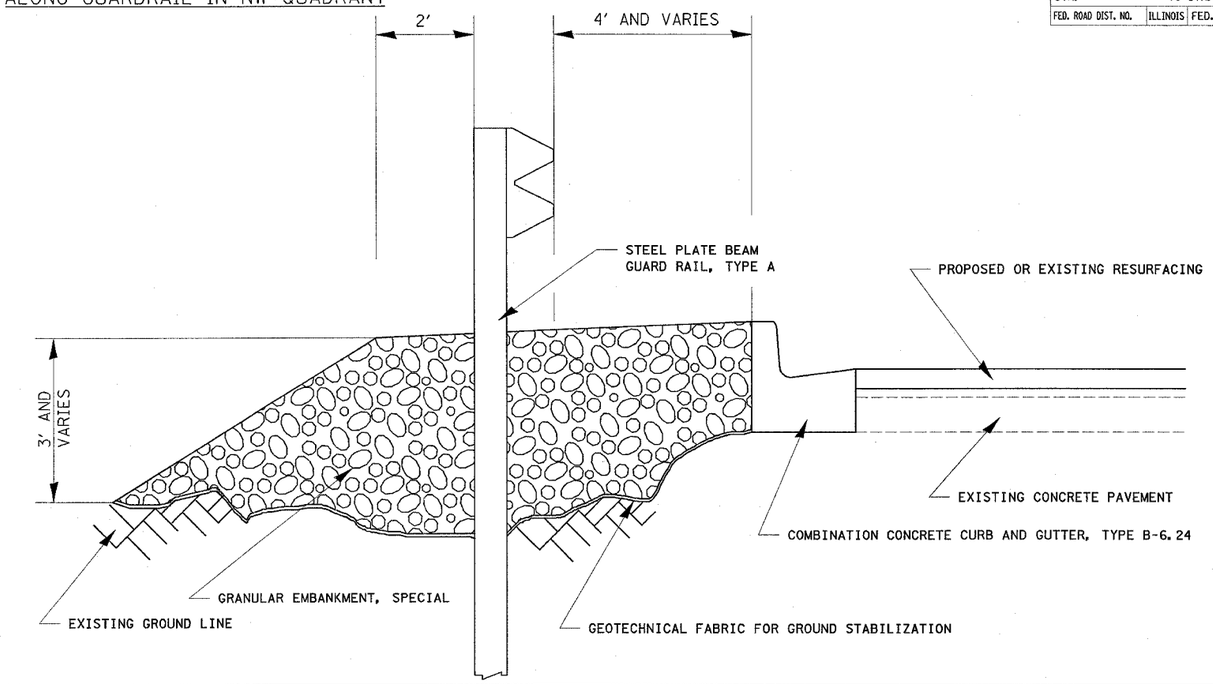

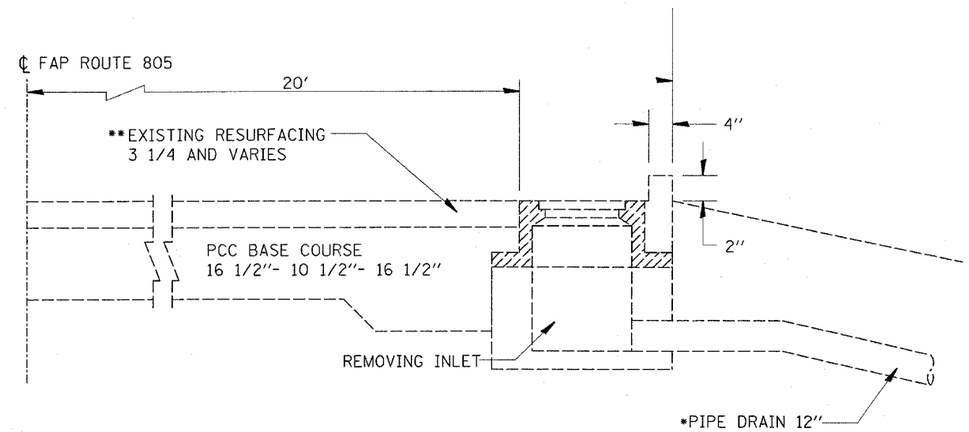

BRIDGE APPROACH PAVEMENT REMOVAL DETAIL

(PAVEMENT REMOVAL)

STA. 68+84.50 TO 69+04.50
STA. 70+89.08 TO 71+09.08

*INCLUDED IN COST OF REMOVING INLETS
**EXISTING RESURFACING INCLUDED IN COST OF PAVEMENT REMOVAL

REVISIONS	
NAME	DATE

ILLINOIS DEPARTMENT OF TRANSPORTATION

DETAILS

FAP ROUTE 805 (IL 161)
SECTION 122 VBR-I
ST. CLAIR COUNTY

DRAWN BY:

PLOT DATE: 10/19/2006

PLAN
NOTE BOOK NO.
SURVEYED
PLOTTED
ALIGNMENT CHECKED
RT. OF WAY CHECKED
CADD FILE NAME
BY
DATE

$$DATE$$
10/19/2006
c:\projects\ed01702\plan\plr097a.dgn
*REF-
*REF-