ROUTE	SECTION	COUNTY	TOTAL SHEETS	SHEET NO.
TR 265	04-01181-00-BR	UNION	10	4
PROJECT NO. BROS-181(25)		CONTRACT NO. 99316		

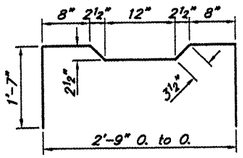

A1 BAR

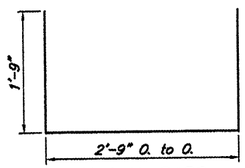

U & U1 BARS

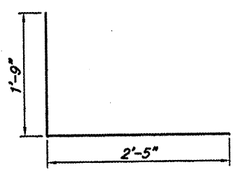

D BAR

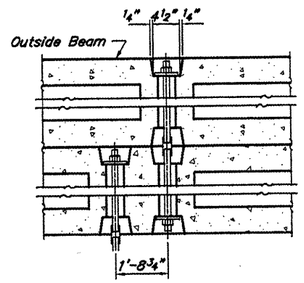

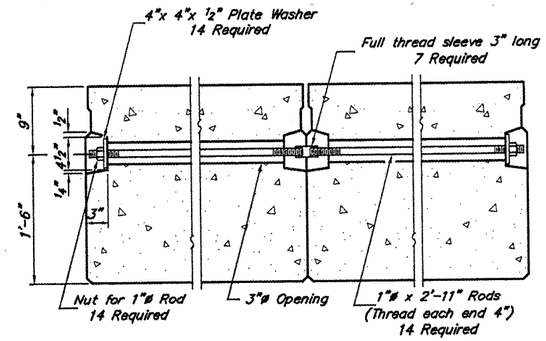

TYPICAL TRANSVERSE TIE ASSEMBLY

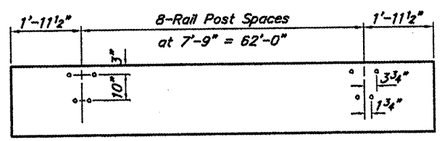

RAIL POST SPACING

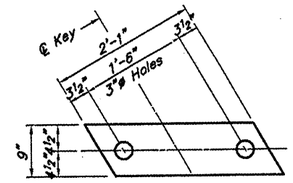

FABRIC BEARING PAD
(Interior)

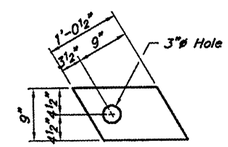

FABRIC BEARING PAD
(Exterior)

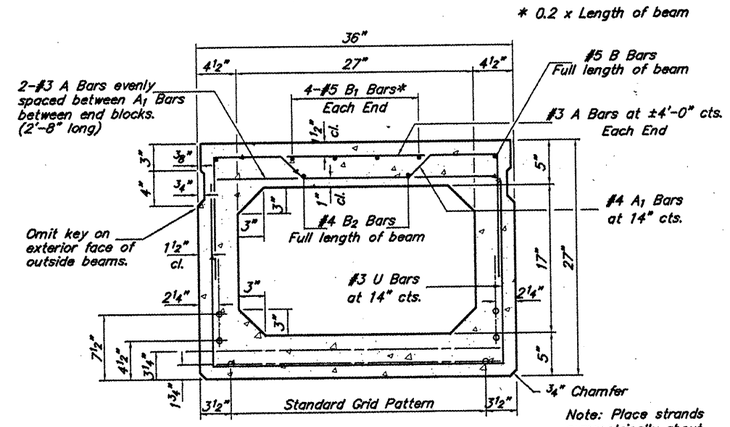

Note: Place strands symmetrically about ℄ of beam.

TYPICAL SECTION

19-½"ø Strands Each Strand Stressed to 28,900 lbs.
8-Strands 1¾" up, 7-Strands 3¼" up,
2-Strands 4½" up, 2-Strands 7½" up.

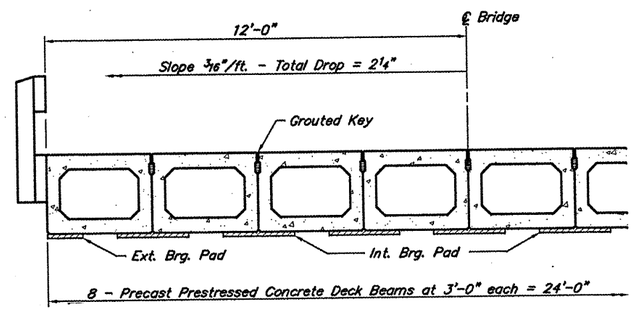

HALF CROSS SECTION

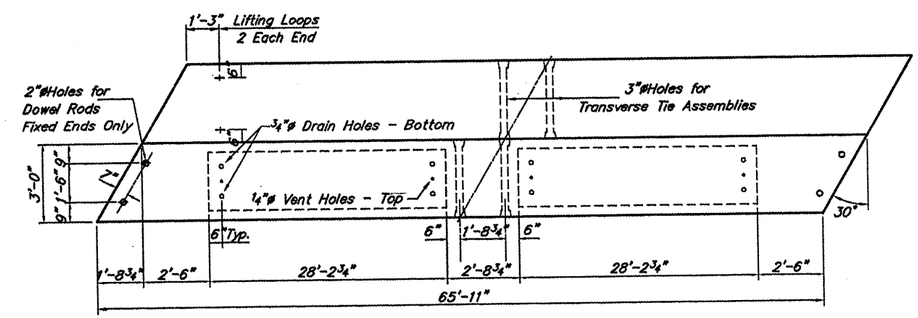

PLAN

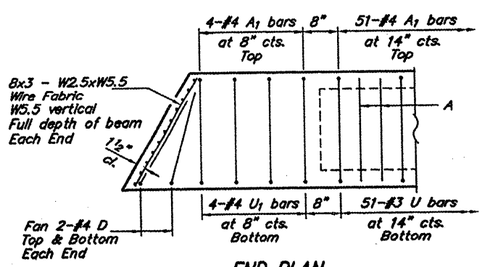

END PLAN

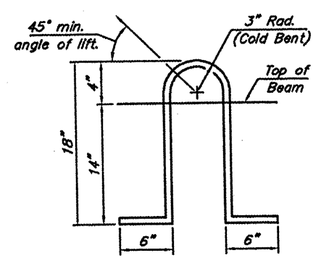

LIFTING LOOP DETAIL

NOTES

Reinforcement bars shall conform to AASHTO M-31 or M-322, Grade 60.

Prestressing steel shall be uncoated high strength, stress-relieved 7-wire strand, Grade 270. The nominal diameter shall be ½" and the nominal cross-sectional area shall be 0.153 sq. in.

Required release strength, F'ci, shall be 4,950 p.s.i.

An equal substitution of the low-relaxation strands for the stress-relieved strands will be permitted.

Lifting loops shall be ¾" diameter, 6x25 class wire rope with fiber core and shall have a minimum ultimate tensile strength of 46,000 lbs. or 2-½"ø-270 ksi strands, as shown.

Keyway surfaces shall be cleaned to remove form oil or other bond breaking material prior to shipment of the beams. Cleaning shall be done by sandblasting the keyway areas between the top of the beam and the bottom edge of the key.

The 1"ø rods in the transverse tie assembly shall be tightened to a snug fit and the threads set. Pockets that recieve transverse tie bar on outside shall be filled with grout after transverse tie assembly is in place.

The bearing seat surfaces shall be adjusted by shimming to assure firm and even bearing. Two ⅛" fabric adjusting shims of the dimensions of the Exterior Bearing Pad shall be provided for each bearing.

After beams have been erected, holes shall be drilled into substructure and anchor dowels placed. Dowel holes shall be filled with non-shrink grout to top of beam and allowed to cure a minimum of 24 hours prior to grouting the shear keys.

Nominal 1" joint at ℄ Pier shall be filled with non-shrink grout.

Rail Post Anchor Devices shall be cast into exterior face of outside beams as elsewhere specified.

Cost of reinforcement and accessories cast into the beam, of bearing pads, and of grouting longitudinal shear keys is incidental to Precast Prestressed Concrete Deck Beams.

When Waterproofing Membrane System is specified, the top surface of the beams shall be finished in accordance with Article 504.06 of the Standard Specifications except that the surface shall not be roughened by brooming. The finished surface shall be free of depressions or high spots with sharp corners, and the top edge of keys shall be rounded or chamfered a min. of ¼".

BILL OF MATERIAL

Bar	No.	Size	Length	Shape
A	108	#3	2'-8"	
A1	59	#4	6'-1"	
B	4	#5	33'-8"	
B1	8	#5	13'-0"	
B2	4	#4	33'-6"	
D	8	#4	4'-2"	
U	51	#3	6'-3"	
U1	8	#4	6'-3"	
Precast Prestressed Concrete Deck Beams			Sq. Ft.	1582

DECK BEAMS 27" X 36"

LINGLE CREEK

SECTION 04-01181-00-BR

UNION COUNTY