F.A.P RTE.	SECTION	COUNTY	TOTAL SHEETS	SHEET NO.
331	5B-3	JACKSON	25	13
STA. 86+00		TO STA. 86+50		
FED. ROAD DIST. NO. 7	ILLINOIS	FED. AID PROJECT		

CONTRACT NO. 98566

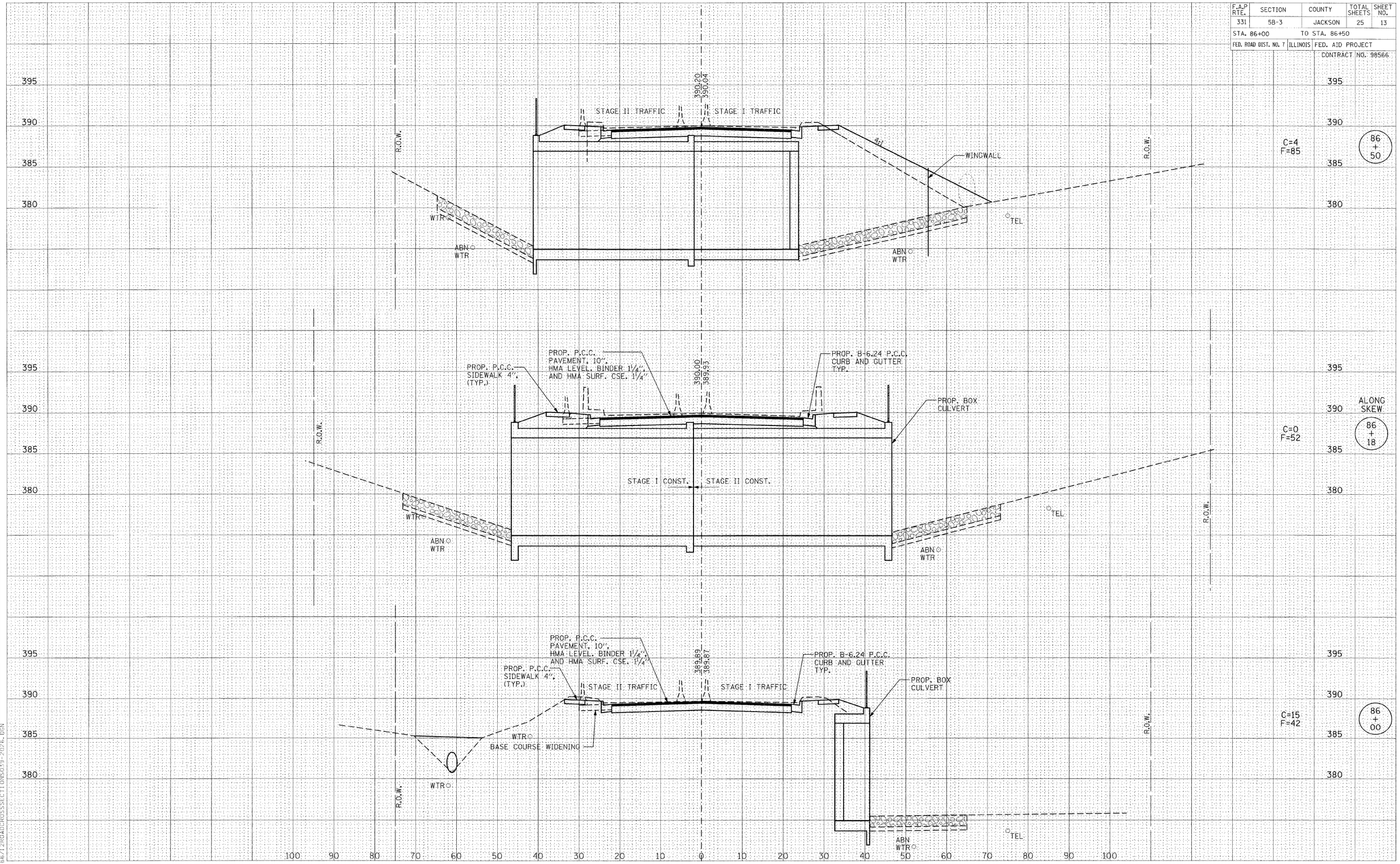

CROSS SECTIONS OF ROADWAY IL ROUTE 13WB OVER PILES FORK CREEK

FAP 331 SECTION 5B-3 JACKSON COUNTY, ILLINOIS

FINAL SURVEY	BY	DATE
SURVEYED		
PLOTTED		
TEMPLATE		
AREAS		
AREAS CHECKED		
NOTE BOOK NO.		

ORIGINAL SURVEY	BY	DATE
SURVEYED		
PLOTTED		
TEMPLATE		
AREAS		
AREAS CHECK.		
NOTE BOOK NO.		

98566/12ROADCROSSSECTIONS039-2026.DGN