# EXISTING ROADWAY TYPICAL CROSS SECTION

FAS 1531 (OLD IL 47)

STA. 2158+89.00 TO STA. 440+00.00

STATION EQUATION:
2219+00.70 BK = 117+76.80 AH

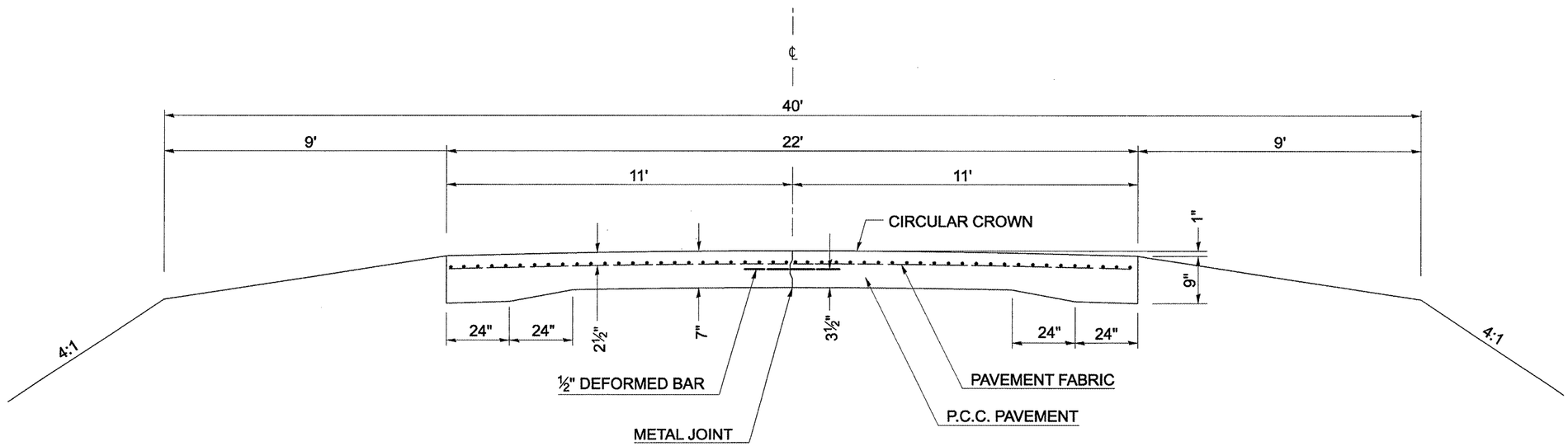


| | | | | | | | | | | |
|---|---|---|---|---|---|---|---|---|---|---|
| FILE NAME = c:\projects\d570740\70740_plan.dgn | USER NAME = carrollrt | DESIGNED - | REVISED - | STATE OF ILLINOIS DEPARTMENT OF TRANSPORTATION | EXISTING TYPICAL CROSS SECTION | F.A.S. RTE. | SECTION | COUNTY | TOTAL SHEETS | SHEET NO. |
| | | DRAWN - | REVISED - | | | 1531 | D5 PATCHING 2009-3 | PIATT | 6 | 4 |
| | PLOT SCALE = 40.0000 ' / IN. | CHECKED - | REVISED - | | | | | CONTRACT NO. 70740 | | |
| | PLOT DATE = 8/15/2008 | DATE - | REVISED - | | SCALE: SHEET NO. OF SHEETS STA. TO STA. | FED. ROAD DIST. NO. | ILLINOIS | FED. AID PROJECT | | |