F.A.I. RTE.	SECTION	COUNTY	TOTAL SHEETS	SHEET NO.
90/94	2005-072 LS	COOK	38	32
STA.		TO STA.		
FED. ROAD DIST. NO. 1	ILLINOIS	FED. AID PROJECT		

60A78

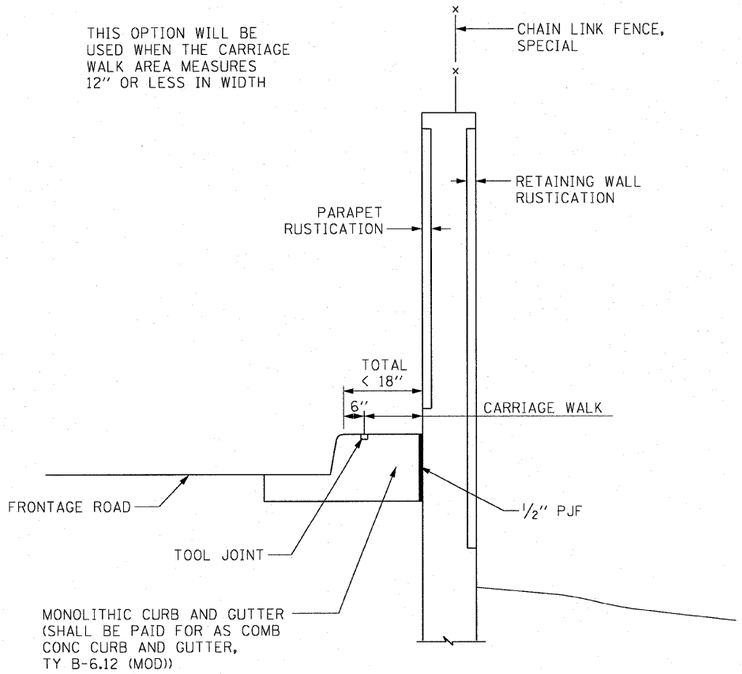

CARRIAGE WALK
AREA < 12" WIDE

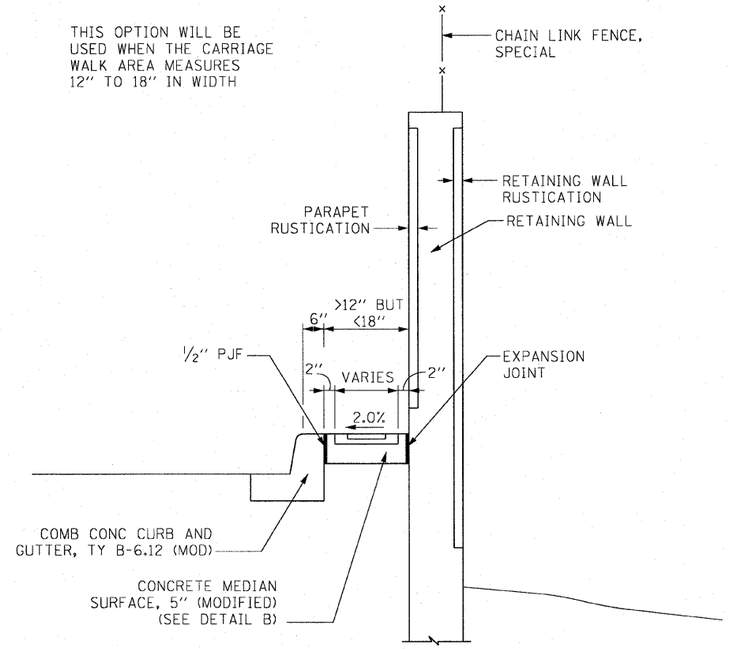

CARRIAGE WALK
AREA 12" TO 18" WIDE

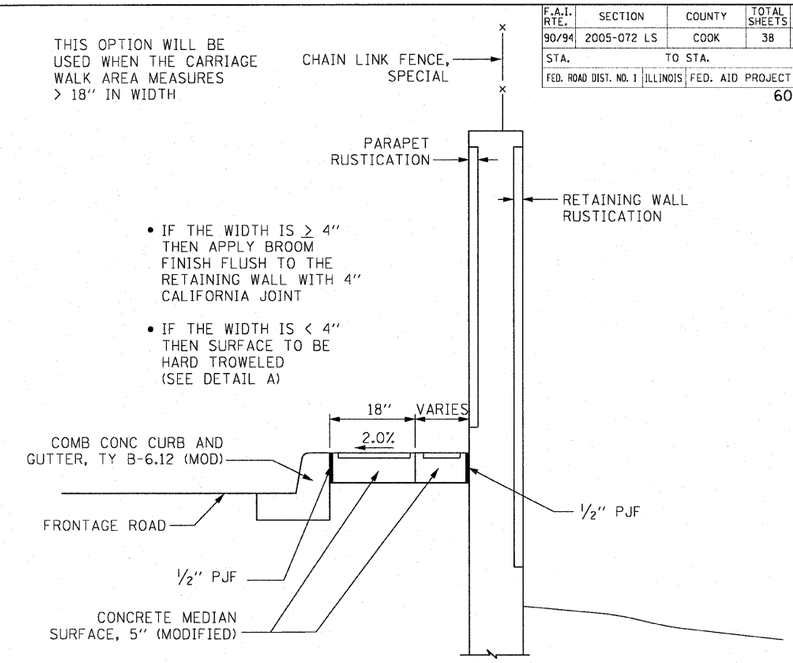

CARRIAGE WALK
AREA > 18" WIDE

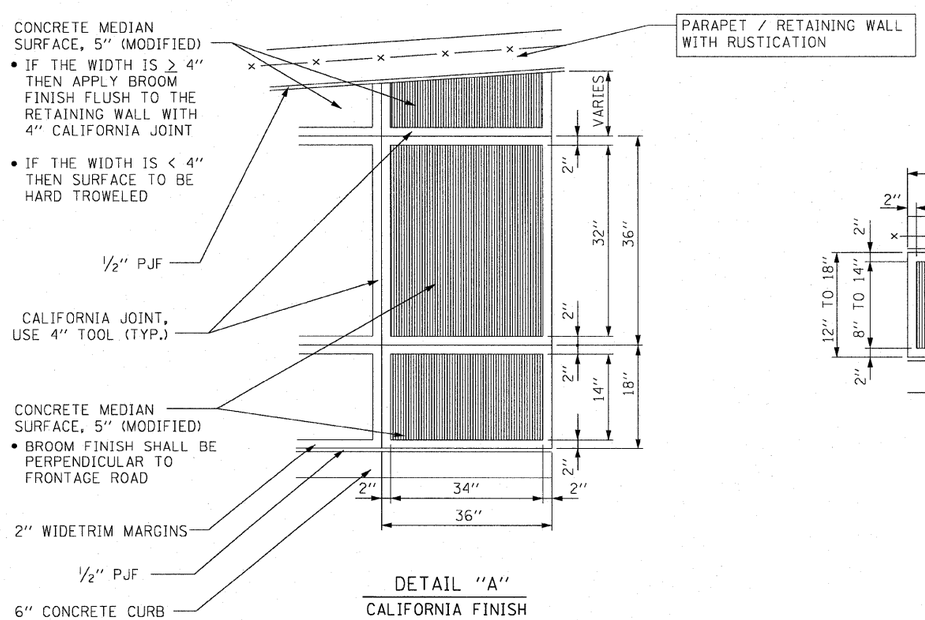

DETAIL "A"
CALIFORNIA FINISH

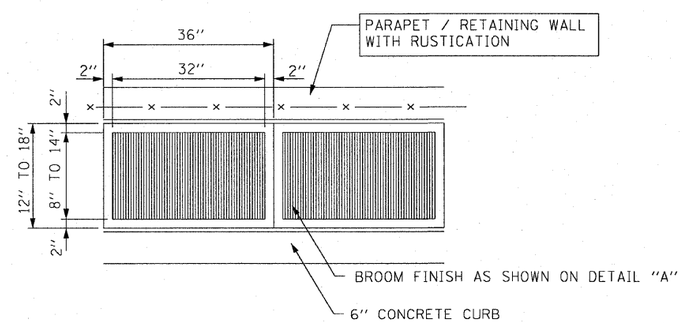

DETAIL "B"
CALIFORNIA FINISH

CTE | AECOM

2 OF 4

REVISIONS	
NAME	DATE

ILLINOIS DEPARTMENT OF TRANSPORTATION
F.A.I. 90/94 (DAN RYAN EXPRESSWAY)
47TH STREET GATEWAY LANDSCAPING AND IRRIGATION

CONSTRUCTION DETAILS
CONCRETE MEDIAN SURFACE, 5" (MODIFIED)
CARRIAGE WALK AND CALIFORNIA FINISH DETAIL

SCALE: NONE — DRAWN BY: PHP
DATE: MAY 02, 2008 — CHECKED BY: NJH

p:\04046\chi1\29-gateway_irrigation\sht\22g (47th)nc22g0022a.sht
05/01/2008 04:05:47 PM