STATE OF ILLINOIS
DEPARTMENT OF TRANSPORTATION

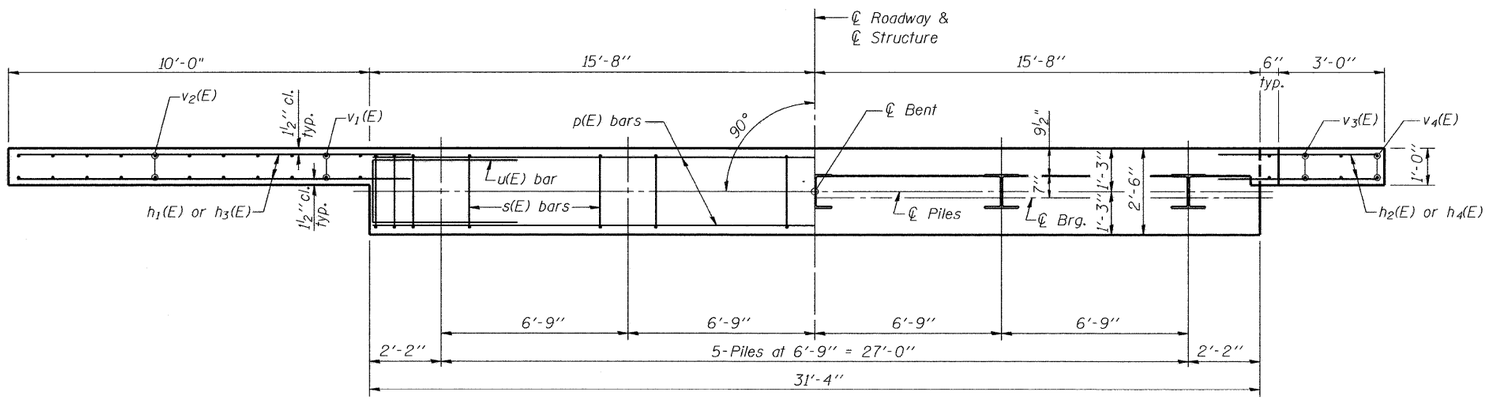

PLAN

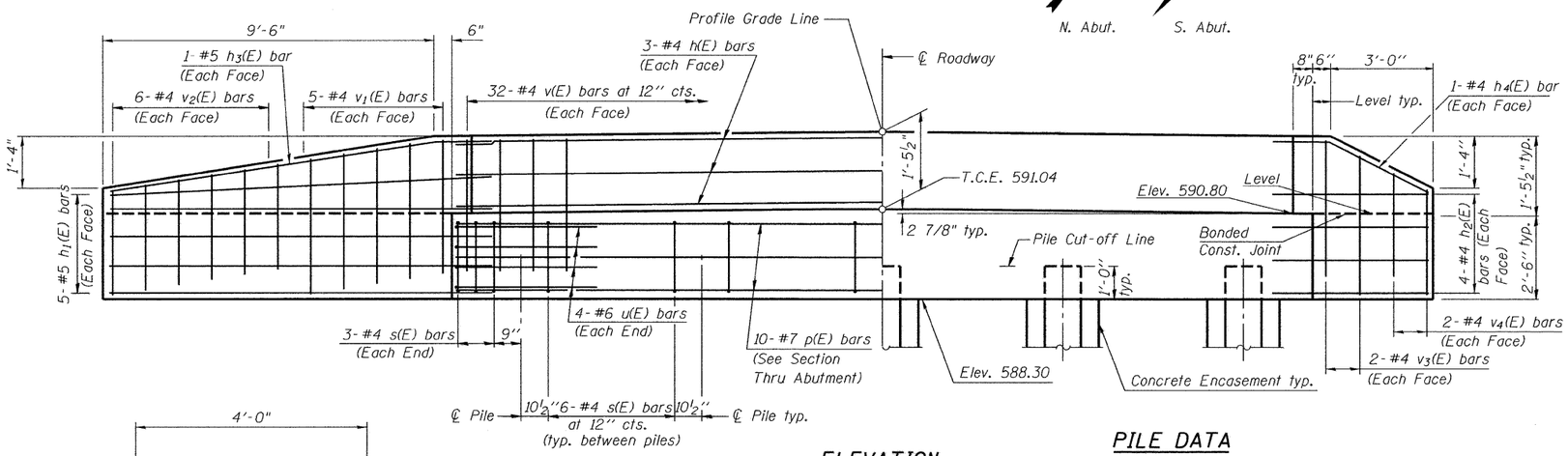

ELEVATION

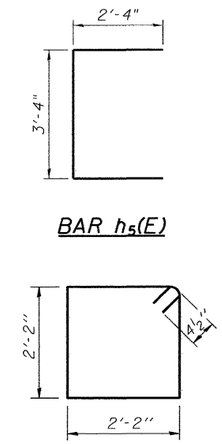

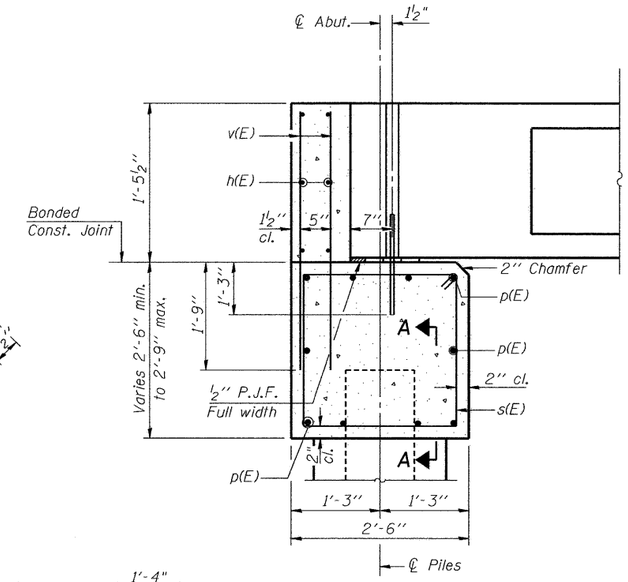

SECTION THRU ABUTMENT

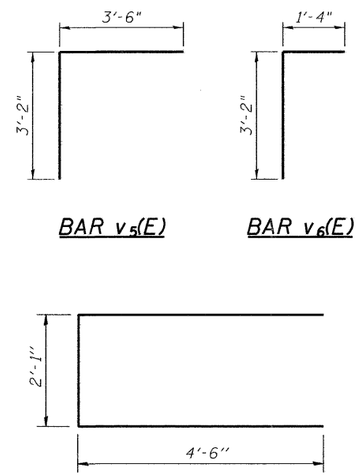

BILL OF MATERIAL
FOR TWO ABUTMENTS

Bar	No.	Size	Length	Shape
h(E)	12	#4	31'-0"	
h_1(E)	20	#5	11'-3"	
h_2(E)	16	#4	5'-0"	
h_3(E)	4	#5	11'-6"	
h_4(E)	4	#4	5'-3"	
h_5(E)	8	#4	8'-0"	
p(E)	20	#7	31'-0"	
s(E)	60	#4	9'-5"	
s_2(E)	40	#5	2'-0"	
u(E)	16	#6	11'-1"	
v(E)	128	#4	3'-1"	
v_1(E)	20	#4	3'-1"	
v_2(E)	24	#4	2'-4"	
v_3(E)	8	#4	3'-3"	
v_4(E)	8	#4	2'-4"	
v_5(E)	8	#4	6'-8"	
v_6(E)	8	#4	4'-6"	
Concrete Structures			Cu. Yd.	22.5
Reinforcement Bars, Epoxy Coated			Lb.	3070
Furnishing Steel Piles HP 12x53			Foot	216
Driving Piles			Foot	216
Test Pile Steel HP 12x53			Each	2
Pile Shoes			Each.	10
Concrete Encasement			Cu. Yd.	3.5
Structure Excavation			Cu. Yd.	77

ABUTMENTS
STRUCTURE NO. 068-3358

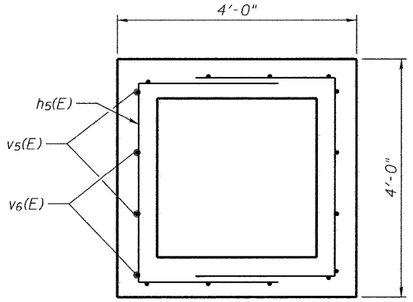

SECTION B-B

Alternate splices of h_5(E) bars in adjacent walls.

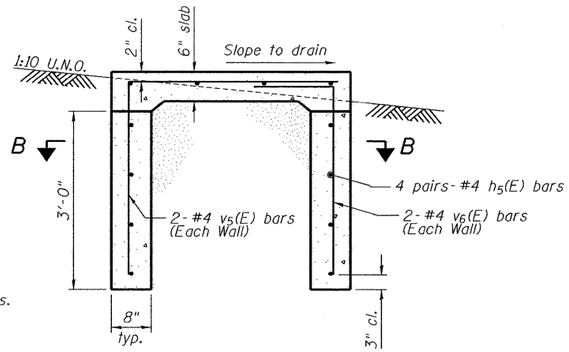

GAGE STATION
CONCRETE PAD SECTION

Alternate v_5(E) and v_6(E) bars in each wall.

PILE DATA

Steel HP 12x53 with pile shoes
Nominal Required Bearing = 300 kips
Factored Resistance Available = 150 kips
Est. Length = 27 ft
No. Required = 8
No. of Test Piles = 2

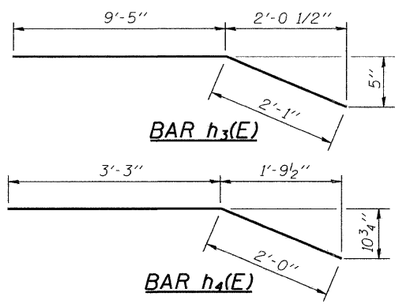

Notes:

The Backwall and the portion of the Wingwalls above the bonded construction joint shall be cast against the in-place beam.

Space reinforcement in cap to miss anchor rods.

See sheet 9 of 12 for details of s_2(E) bar.

The Steel H-Piles shall be acoording to AASHTO M270 Grade 50.

The test pile(s) shall be driven to 110 percent of the Nominal Required Bearing indicated on the pile data information.

Drive one (1) test pile in a production location at each of the abutments.

See sheet 3 of 12 for details at superstructure attachment.

See sheet 9 of 12 for Section A-A.

The cost of the concrete required for the gage station concrete pad is included in the Cost of Concrete Structures.

DESIGNED	CMF
CHECKED	TMM
DRAWN	RNH
CHECKED	TMM

McDonough-Whitlow, P.C.
Consulting Engineers & Land Surveyors
138 East Wood Street
Hillsboro, IL 62049
Phone: 217.532.9233
Fax: 217.532.6300
PROFESSIONAL DESIGN No. 184-002754

SHEET NO. 8
12 SHEETS

F.A.S. RTE.	SECTION	COUNTY	TOTAL SHEETS	SHEET NO.
721	08-00128-00 BR	MONTGOMERY	22	14

CONTRACT NO. 93496

FED. ROAD DIST. NO. _ | ILLINOIS | FED. AID PROJECT