STATE OF ILLINOIS
DEPARTMENT OF TRANSPORTATION

Notes:
Approach slab concrete shall be paid for as Concrete Superstructure.
Approach footing concrete shall be paid for as Concrete Structures.
Reinforcement shall be paid for as Reinforcement Bars, Epoxy Coated.
For v_{100}(E) bar details, see sheet 12 of 22.
The approach footing maximum applied service bearing pressure (Qmax) = 2.0 ksf.
For bar splicer details, see sheet 20 of 22.
Cost of excavation for approach footing included with Concrete Structures.
For Porous Granular Embankment (Special) and drainage treatment details, see sheet 1 of 22.

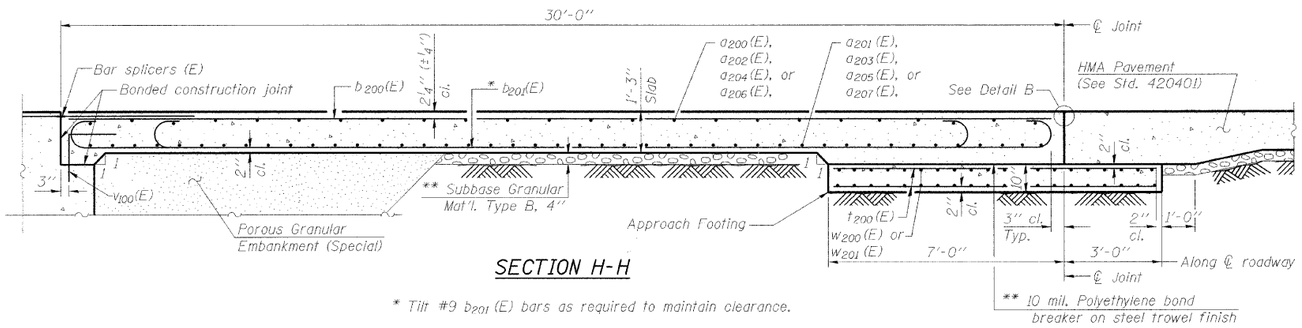

SECTION H-H

* Tilt #9 b_{201} (E) bars as required to maintain clearance.

** Cost included with Concrete Superstructure.

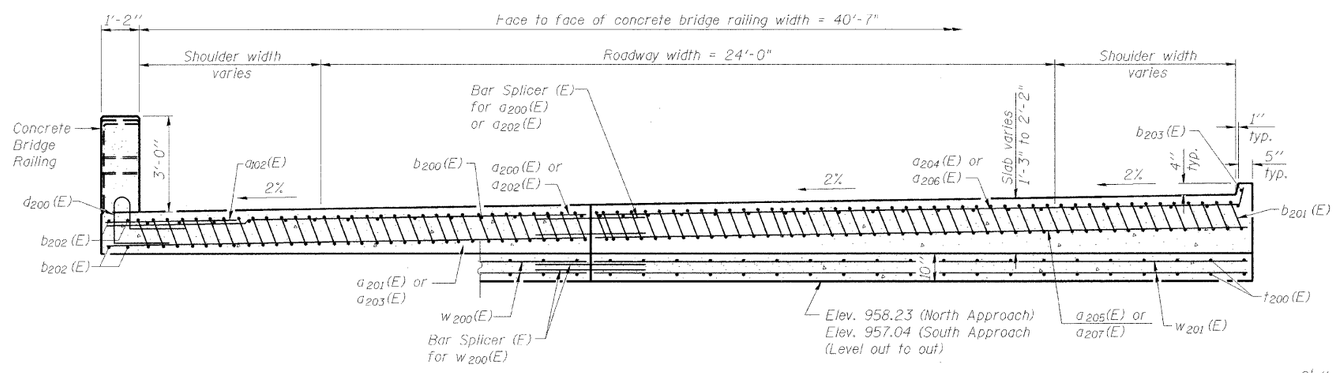

NEAR ABUTMENT

SECTION I-I

(North approach shown. South approach similar.)
(See Plan for dimensions not shown)

AT APPROACH FOOTING

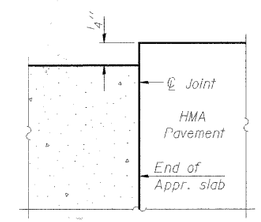

FLEXIBLE PAVEMENT

DETAIL B

TWO APPROACHES
BILL OF MATERIAL

Bar	No.	Size	Length	Shape
a102 (E)	36	#6	6'-6"	
a200 (E)	36	#4	18'-1"	
a201 (E)	66	#5	18'-1"	
a202 (E)	18	#4	17'-8"	
a203 (E)	30	#5	17' 5"	
a204 (E)	36	#4	24'-1"	
a205 (E)	66	#5	24'-1"	
a206 (E)	18	#4	23'-8"	
a207 (E)	30	#5	23'-5"	
b200 (E)	72	#4	29'-8"	
b201 (E)	204	#9	29'-9"	
b202 (E)	16	#4	20'-6"	
b203 (E)	4	#4	8'-10"	
d200 (E)	172	#5	6'-6"	
t200 (E)	176	#5	9'-8"	
w200 (E)	80	#5	17'-5"	
w201 (E)	80	#5	23'-5"	

Reinforcement Bars, Epoxy Coated	Pound	34,700
Concrete Structures	Cu. Yds.	25.7
Concrete Superstructure	Cu. Yds.	131.1
Concrete Bridge Railing	Foot	84
Bar Splicers	Each	230
Bridge Deck Grooving	Sq. Yd.	258
Protective Coat	Sq. Yd.	313

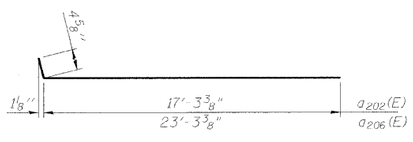

BARS a_{202}(E) and a_{206}(E)

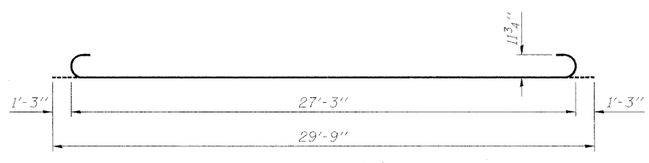

BAR b_{201}(E)

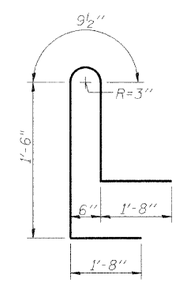

BAR d_{200}(E)

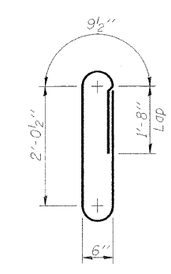

BAR d_{102}(E)

(Sheet 2 of 2)
BRIDGE APPROACH SLAB DETAILS
STRUCTURE NO. 056-3174

DESIGNED	LAN
CHECKED	MDS
DRAWN	LAN
CHECKED	MDS

TranSystems
1051 Perimeter Drive, Suite 1025
Schaumburg, IL 60173-5058
Phone: (847) 605-9600
Fax: (847) 605-9610

SHEET NO. 14	F.A.S. RTE.	SECTION	COUNTY	TOTAL SHEETS	SHEET NO.
22 SHEETS	0026	02-00269-00-BR	McHENRY	153	106
			CONTRACT NO. 63212		
	FED. ROAD DIST. NO.	ILLINOIS	FED. AID PROJECT		

05/29/09

lanelson
5/28/2009 1:37:53 PM - q:\ch04\0083\structural\sheets\Applet2.sht