CONTRACT NO. 60B86

F.A.I. RTE.	SECTION	COUNTY	TOTAL SHEETS	SHEET NO.
55	2006-032 BY	WILL	505	284
STA.		TO STA.		
FED. ROAD DIST. NO.	ILLINOIS	FED. AID PROJECT		

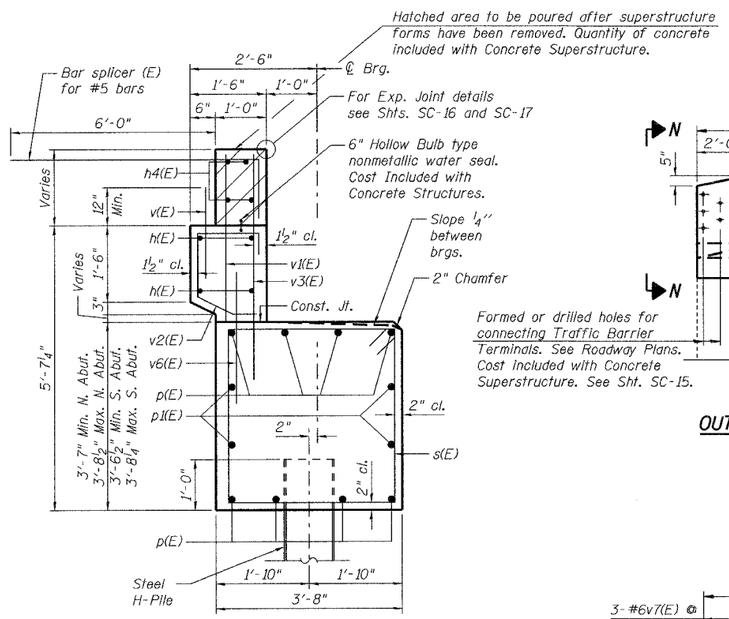

SECTION J-J

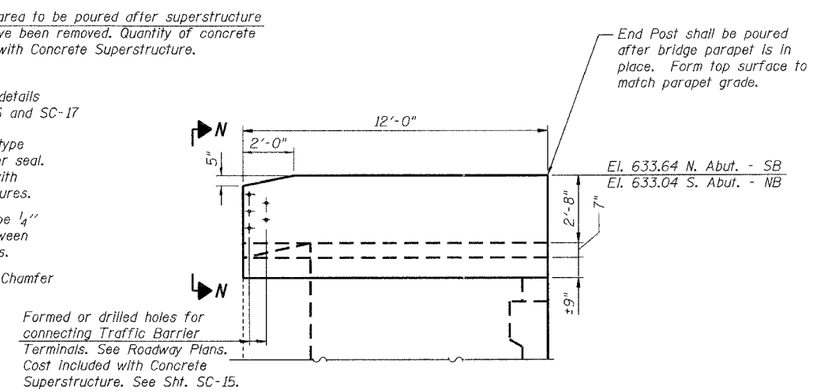

OUTSIDE WINGWALL ELEVATION

Showing Dimensions

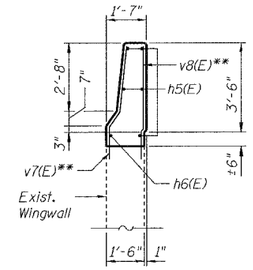

SECTION M-M

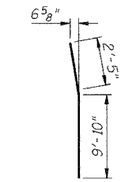

BAR h6(E)

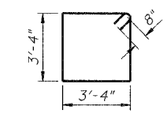

BAR s(E)

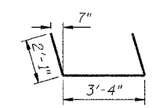

BAR u(E)

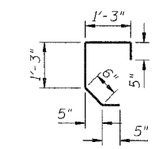

BAR v2(E)

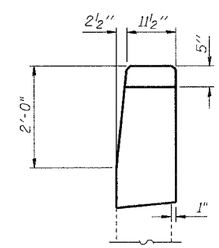

VIEW N-N

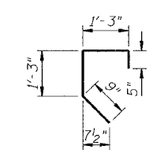

BAR v4(E)

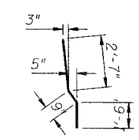

BAR v7(E)

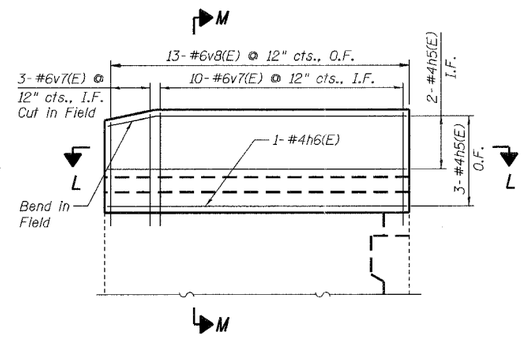

OUTSIDE WINGWALL ELEVATION

Showing Reinforcement

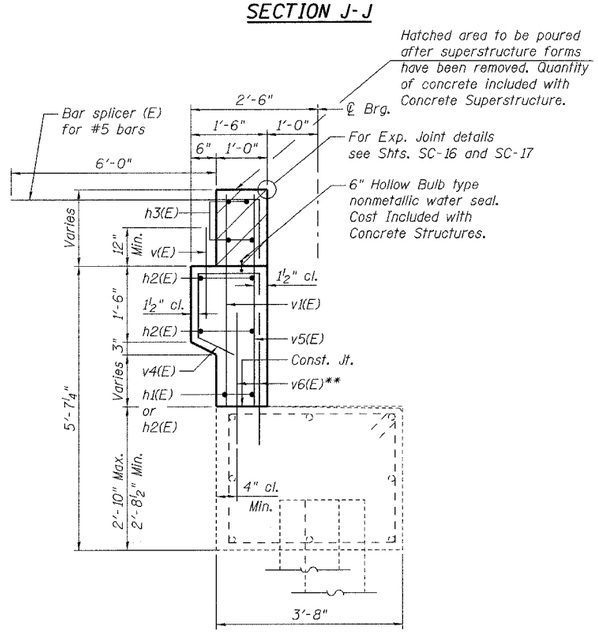

SECTION K-K

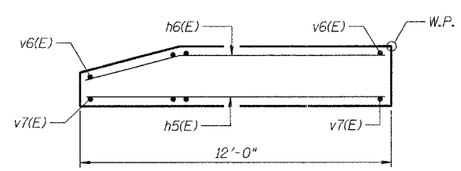

SECTION L-L

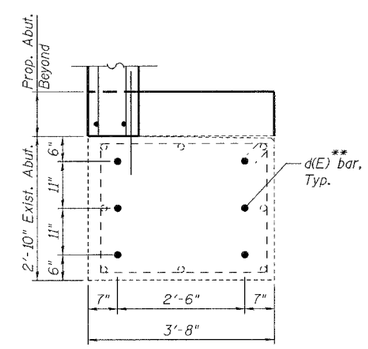

SECTION P-P

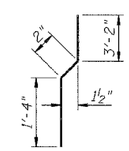

BAR v8(E)

** Drill and epoxy grout bars in 9" min. (U.N.O.) drilled holes according to Section 584 of the Standard Specifications. Method and grout are subject to the approval of the Engineer. Cost included with Reinforcement Bars, Epoxy Coated.

Notes:

1. Work this sheet with Sht. SC-6 and SC-24.
2. Reinforcement bars designated (E) shall be epoxy coated.

SHT. SC-25 OF 38

REVISIONS	
NAME	DATE

ILLINOIS DEPARTMENT OF TRANSPORTATION
FAI ROUTE 55
US 30 (PLAINFIELD ROAD) TO LILY CACHE SLOUGH
SB & NB I-55 OVER US RTE. 30, S.N. 099-0016 & 099-0017
STA. 587+80.82, SECTION 2006-032 BY
WILL COUNTY

NORTH ABUTMENT - SB, SOUTH ABUTMENT - NB WIDENING - 2

SCALE:
DRAWN BY PA
DATE 07/05/06
CHECKED BY MJK

TENG & ASSOCIATES, INC.
ENGINEERS/ARCHITECTS/PLANNERS
CHICAGO, ILLINOIS

MORCOM, N.V., INC.
CONSULTING ENGINEERS
CHICAGO, ILLINOIS

PLOT DATE = $DATE$
FILE NAME = $FILEL$
PLOT SCALE = $SCALE$
USER NAME = $USER$

...\A6P901D82L.DGN, ...\A6P901D82L.DGN, ...\D2P901A082.DGN
6-28-2006,15:54:45 GARCIA42, S:\DOCUMENT\82361561\STRUCT\DGN\A6B01D861.SHT