F.A.U. ROUTE NO.	SECTION	COUNTY	TOTAL SHEETS	SHEET NO.
2552	•	DUPAGE	563	408
FED. ROAD DIST. NO.	ILLINOIS	FED. AID PROJECT-		

SHEET NO. - 11
13 - SHEETS

• 00-00114-00-PV CONTRACT NO. 63024

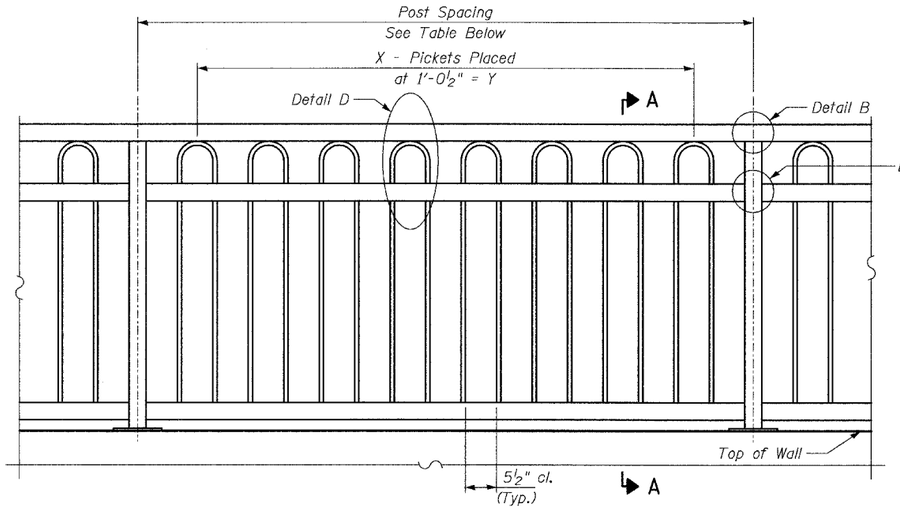

ELEVATION - TYPICAL SECTION

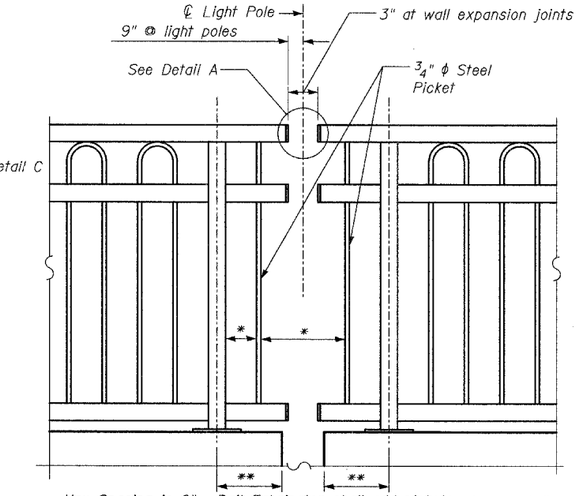

* Max Spacing is 6". Rail Fabricator shall add pickets as necessary. Not necessary at light pole locations.
** See wall plan and elevation sheets for post spacing and end dimensions.

BICYCLE RAILING

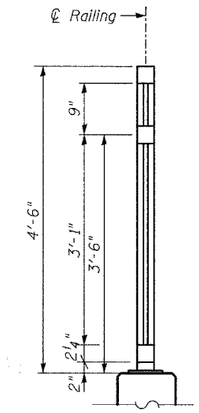

SECTION A-A

NOTES:

1. Railing shall be in accordance with Section 509 of the Standard Specifications, except as noted, and will be paid for at the contract unit price per foot for Bicycle Railing, Special or Parapet Railing, Special.
2. Hollow Structural Steel Tubing shall conform to the requirements of ASTM Designation of 500, Grade B, Structural Steel Tubing. Anchor bolts shall conform to ASTM A307 unless noted otherwise.
3. All other steel shapes and plates shall conform to the requirements of AASHTO M 270 Grade 36.
4. The bicycle railing and parapet railing shall be powder coated and the color shall be black.
5. The exterior steel surface shall be blast cleaned to Steel Structures Painting Council Surface Preparation Specification No. 6 (SSPC-SP6) requirements using cast steel abrasives conforming to the Society of Automotive Engineers (SAE) recommended Practice J827. The blast method used is a recirulating, closed cylcle centrifugal wheel system with abrasive conforming to SAE Shot Number S280.
6. All exterior surfaces shall be coated with a Urethane or Triglycidyl Isocyanurate (TGIC) Polyester Powder to a minimum film thickness of 0.002". The coating shall be electrostatically applied and cured in a gas fired convection oven by heating the steel substrate to a minimum of 350 degrees fahrenheit and a maximum of 400 degrees fahrenheit. The thermosetting powder resin shall provide both intercoat as well as substrate fusion adhesion that meets 5A or 5B classifications of ASTM D3359.
7. Ship railing to the site in a manner to prevent damage to the powder coating.

RAILING LAYOUT**

Post Spacing	Picket Layout	
	X	Y
4'-10½"	4	3'-1½"
5'-11"	5	4'-2"
6'-11½"	6	5'-2½"
8'-0"	7	6'-3"
9'-0½"	8	7'-3½"

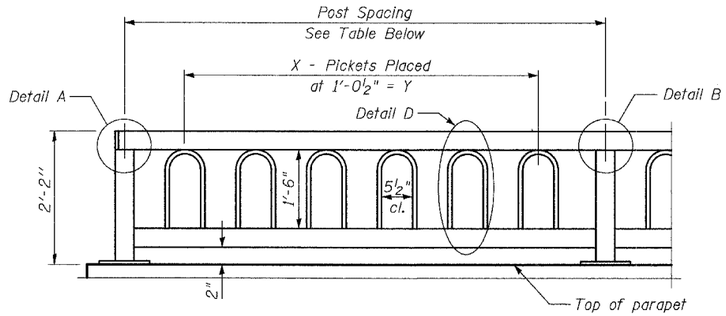

PARAPET RAILING ELEVATION

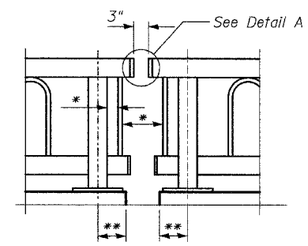

PARAPET RAILING
ELEVATION AT EXPANSION JOINT

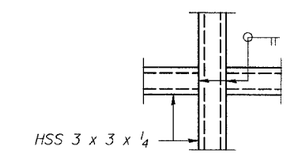

DETAIL C

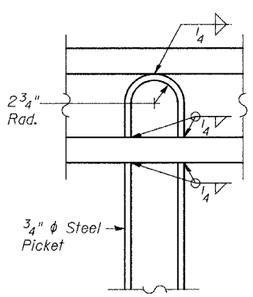

DETAIL D

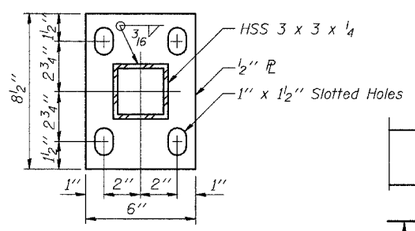

BASE PL

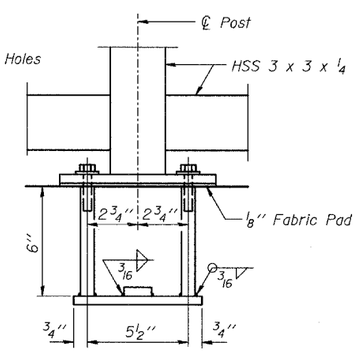

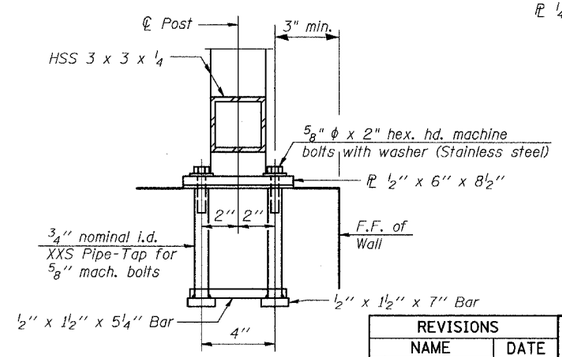

TYPICAL ANCHOR BOLT DETAILS

In lieu of the cast-in-place anchor device shown, the Contractor has the option of drilling and setting ⅝" ϕ anchor rods according to Article 509.06 of the Standard Specifications. Embedment shall be according to the manufacturer's specifications.

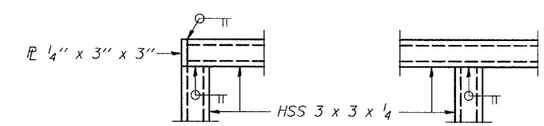

DETAIL A DETAIL B

BILL OF MATERIAL

Item	Unit	Quantity
Bicycle Railing	Foot	151
Parapet Railing	Foot	216

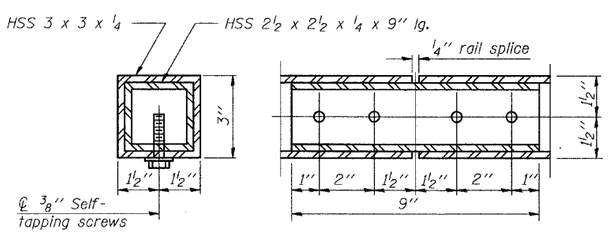

TYPICAL RAIL SPLICE DETAILS

TYLIN INTERNATIONAL

DESIGNED	TB
CHECKED	SP
DRAWN	TB
CHECKED	SP

REVISIONS	
NAME	DATE

WALLS C AND D
RAILING DETAILS

WASHINGTON - 75TH STREET
F.A.U. ROUTE 2552
SECTION 00-00114-00-PV
DUPAGE COUNTY

x:\walls\cd\rail1.dgn 4/10/2008 1:15:17 PM