| F.A.U. ROUTE NO. | SECTION | COUNTY | TOTAL SHEETS | SHEET NO. |
|---|---|---|---|---|
| 2552 | • | DUPAGE | 563 | 400 |
| FED. ROAD DIST. NO. | | ILLINOIS | FED. AID PROJECT- | |

SHEET NO. - 3
13 - SHEETS

• 00-00114-00-PV CONTRACT NO. 63024

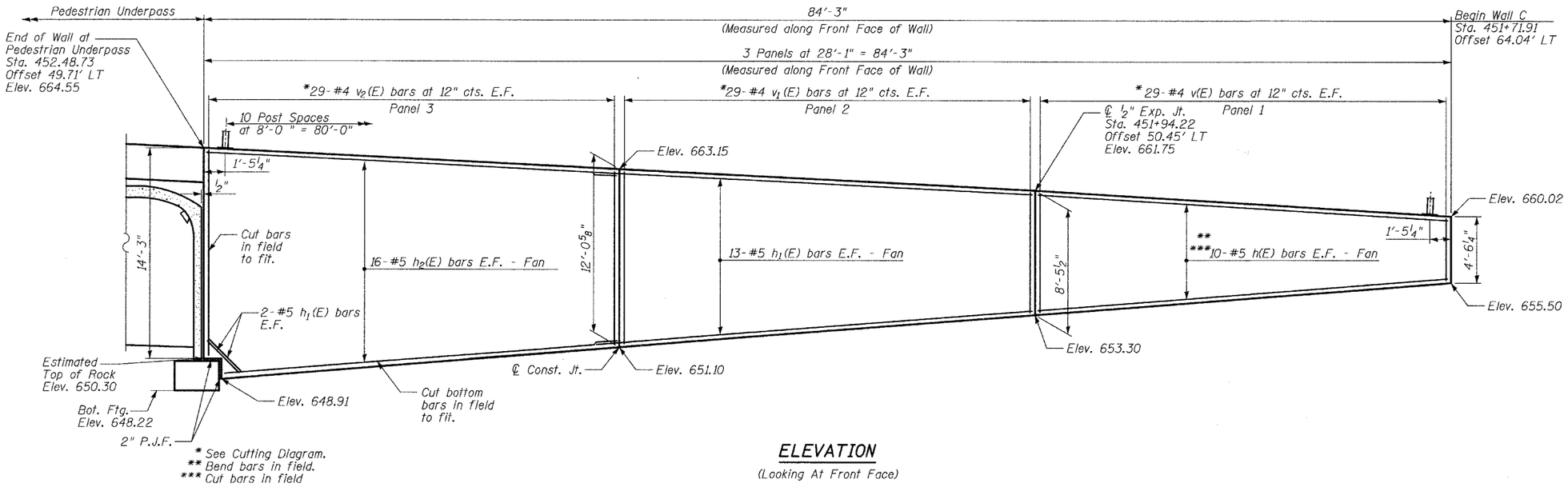


## ELEVATION

(Looking At Front Face)

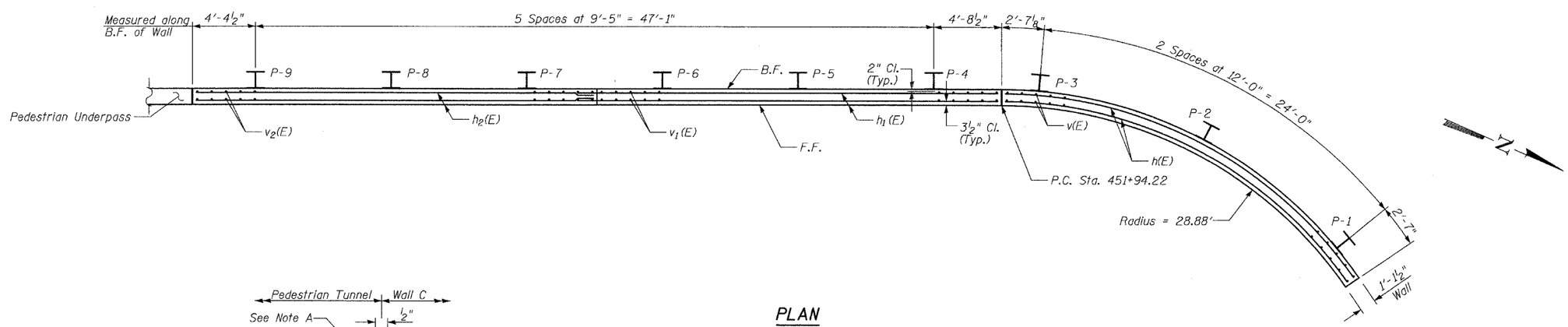


## PLAN

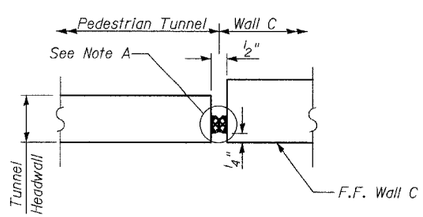


## DETAIL A

(Exxagerated for clarity)

Note A:
Preformed Joint Seal (6" from top of wall to top of tunnel footing). Cost included with Concrete Structures. See Special Provisions for details.

## LAP SPLICES

| Bar | Lap |
|---|---|
| #5 | 2'-2" |

## NOTES:

1. B.F. denotes Back Face.
2. E.F. denotes Each Face.
3. F.F. denotes Front Face.
4. Work this sheet with Sheets 4 & 5 of 13.
5. Pile spacing measured along back face of wall.
6. Offsets are measured from the ℄ NB Washington St. to the front face of wall.
7. See Sheet 8 of 13 for limits of architectural finish.
8. See Sheet 11 of 13 for railing details.

TYLIN INTERNATIONAL

| | |
|---|---|
| DESIGNED | - TB |
| CHECKED | - SP |
| DRAWN | - TB |
| CHECKED | - SP |

| REVISIONS | |
|---|---|
| NAME | DATE |

WALL C
PLAN & ELEVATION
STA. 451+71.91 TO STA. 452+48.73

WASHINGTON - 75TH STREET
F.A.U. ROUTE 2552
SECTION 00-00114-00-PV
DUPAGE COUNTY