K:\Springfieldap\0303508\draw\sheets\Rehab\
FILE: Typ-Sect2.dwg
LAYOUT: Layout1
UPDATE BY: jraubach
SURVEY BOOK #
DATE: Tue 8/17/04 1:25pm
XREF DWG: TB.DWG
CLNTINF.DWG

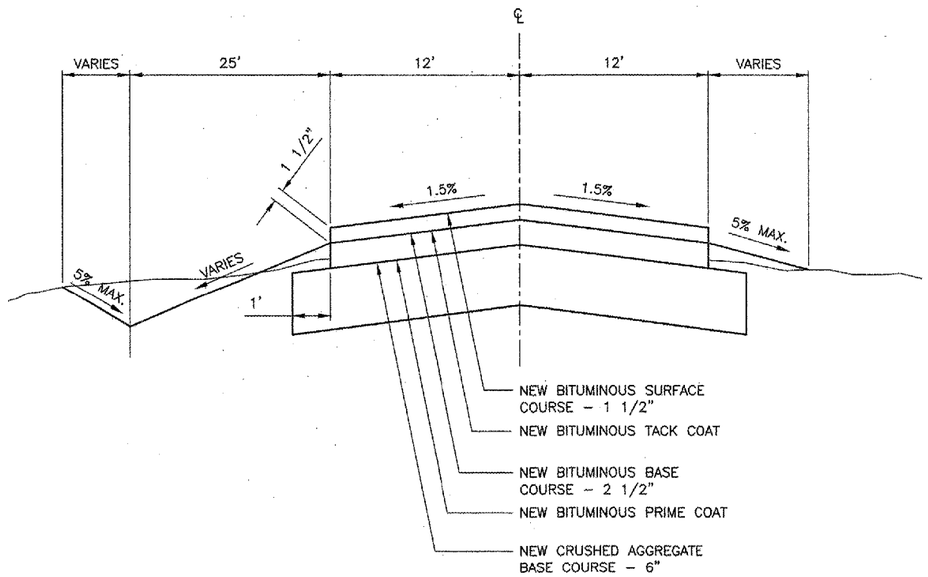

SE PERIMETER ROAD
STA. 39+21.48 TO STA. 42+31.87
(G) N.T.S. (G)

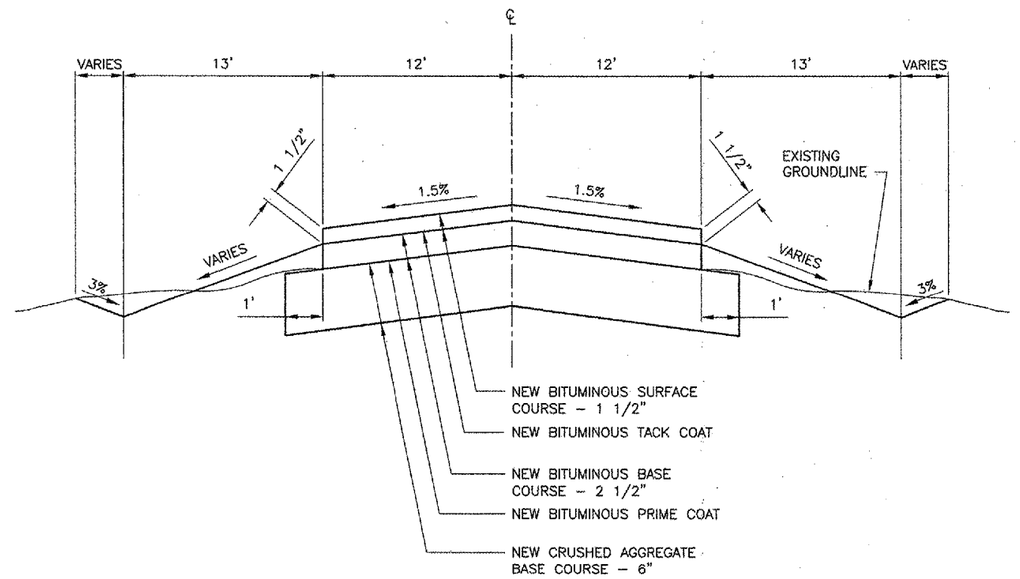

SE PERIMETER ROAD
STA. 42+90.27 TO STA. 49+01.27
(H) N.T.S. (H)

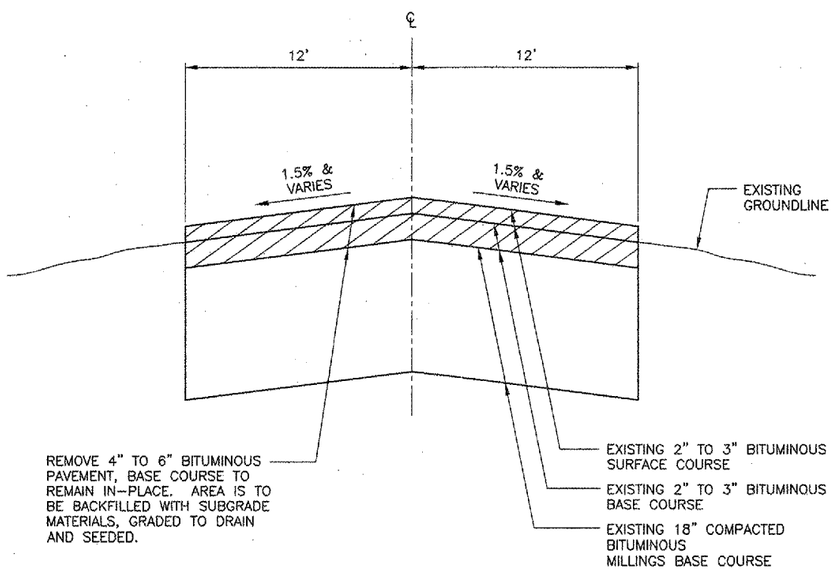

SE PERIMETER ROAD PAVEMENT REMOVAL
(I) N.T.S. (I)

REVISIONS

NUMBER	BY	DATE

0 1 2
THIS BAR IS EQUAL TO 2" AT FULL SCALE (34X22).

SPRINGFIELD AIRPORT AUTHORITY
CAPITAL AIRPORT
SPRINGFIELD, ILLINOIS

REHABILITATE RUNWAY 4 OVERRUN, OVERLAY NE PERIMETER ROAD; REALIGN PORTION OF SE PERIMETER ROAD
TYPICAL SECTIONS
SE PERIMETER ROAD

CMT
CRAWFORD, MURPHY & TILLY, INC.
CONSULTING ENGINEERS
© Copyright CMT, Inc.

DESIGN BY:	SMS
DRAWN BY:	CMT
CHECKED BY:	RLN
APPROVED BY:	RLN
DATE:	08/07/2004
JOB No:	03035-08-00

IL. PROJ. NO. SPI-3344
AIP PROJ. NO. 3-17-0096-3X