CA100

K:\SpringfieldAp\0303508\draw\sheets\Rehab\
FILE: StakePlan-OR.dwg
LAYOUT: Layout1
UPDATE BY: jraubach
SURVEY BOOK #
DATE: Tue 8/17/04 1:13pm
XREF DWG: CLNTINF.DWG
PropGeo.dwg
KEYMAP.dwg
Capital_Base.dwg
Staking-OR.dwg
TB.DWG

REVISIONS		
NUMBER	BY	DATE

0 1 2
THIS BAR IS EQUAL TO 2" AT FULL SCALE (34X22).

LEGEND

583.92 NEW SPOT ELEVATION

583.92 EXISTING SPOT ELEVATION

NOTES

1. UPON COMPLETION OF THE RUBBLIZATION, THE CONTRACTOR SHALL SURVEY THE RUBBLIZED SURFACE TO DETERMINE IF ADJUSTMENTS IN THE NEW GRADES ARE NECESSARY.

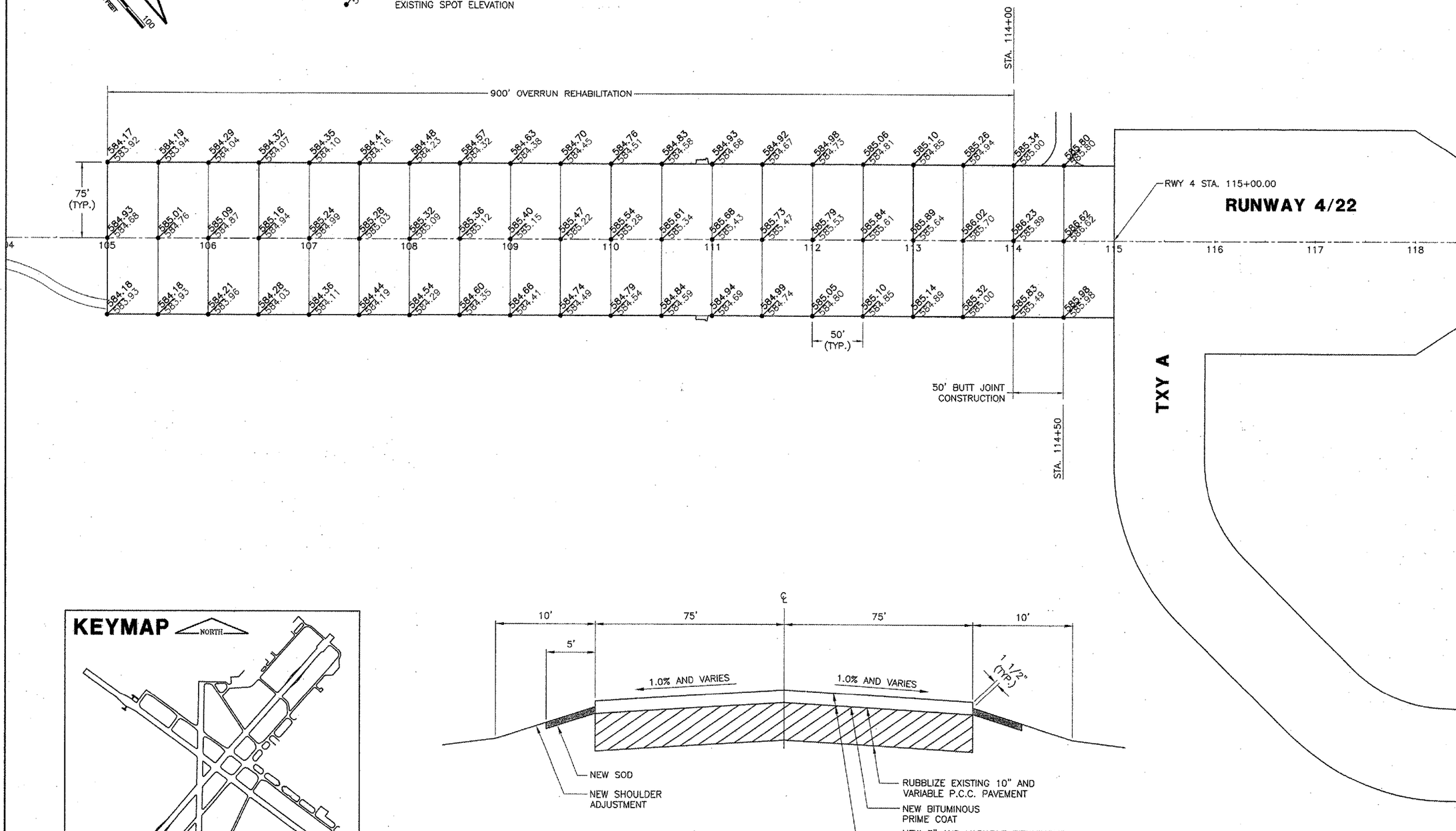

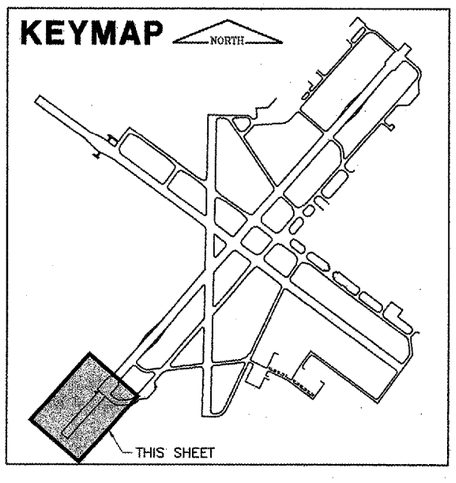

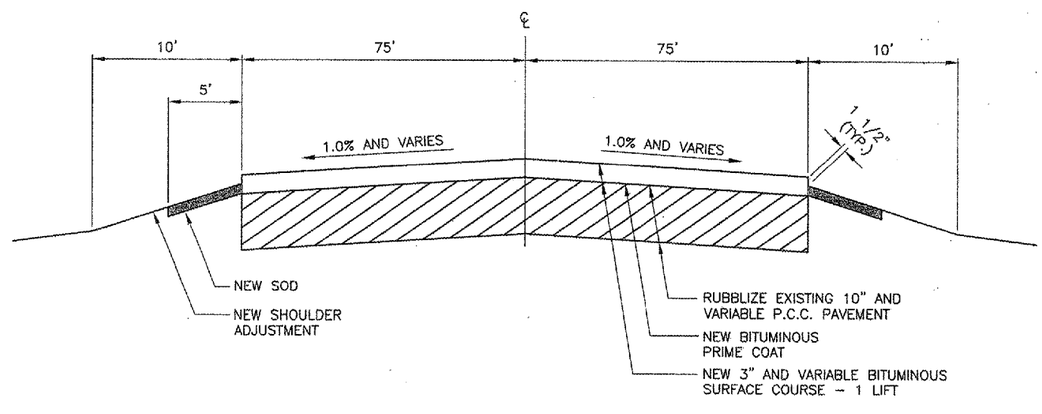

(A) OVERRUN REHABILITATION (A)
N.T.S.

SPRINGFIELD AIRPORT AUTHORITY
CAPITAL AIRPORT
SPRINGFIELD, ILLINOIS

REHABILITATE RUNWAY 4 OVERRUN, OVERLAY NE PERIMETER ROAD, REALIGN PORTION OF SE PERIMETER ROAD
GRADING AND STAKING PLAN
RUNWAY 4 OVERRUN

CMT
CRAWFORD, MURPHY & TILLY, INC.
CONSULTING ENGINEERS

© Copyright CMT, Inc.

DESIGN BY:	SMS
DRAWN BY:	CMT
CHECKED BY:	RW
APPROVED BY:	RW
DATE:	08/07/2004
JOB No:	03035-08-00

IL. PROJ. NO. SPI-3344
AIP PROJ. NO. 3-17-0096-3X