STATE OF ILLINOIS
DEPARTMENT OF TRANSPORTATION

ROUTE NO.	SECTION	COUNTY	TOTAL SHEETS	SHEET NO.
TR 234A	*	SHELBY	24	17
FED. ROAD DIST. NO.		ILLINOIS	FED. AID PROJECT-	

SHEET NO. 10
17 SHEETS

* 04-20118-00-BR CONTRACT NO. 95557

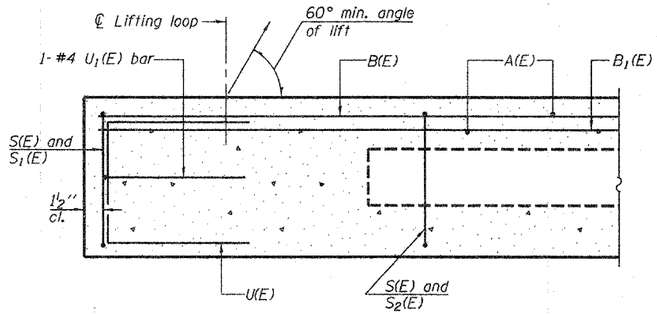

SECTION C-C

MIN. BAR LAP
#4 Bar = 1'-8"
#5 Bar = 2'-2"

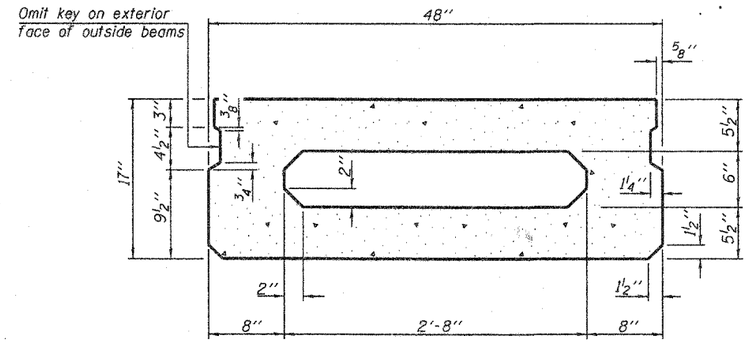

SECTION A-A
(Showing dimensions)

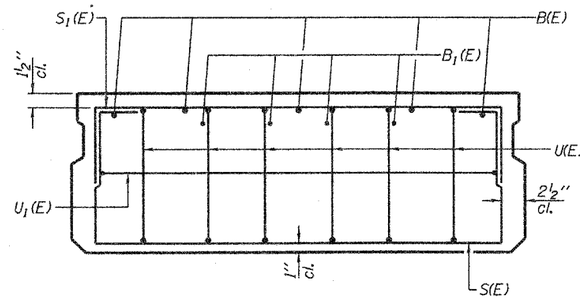

VIEW B-B

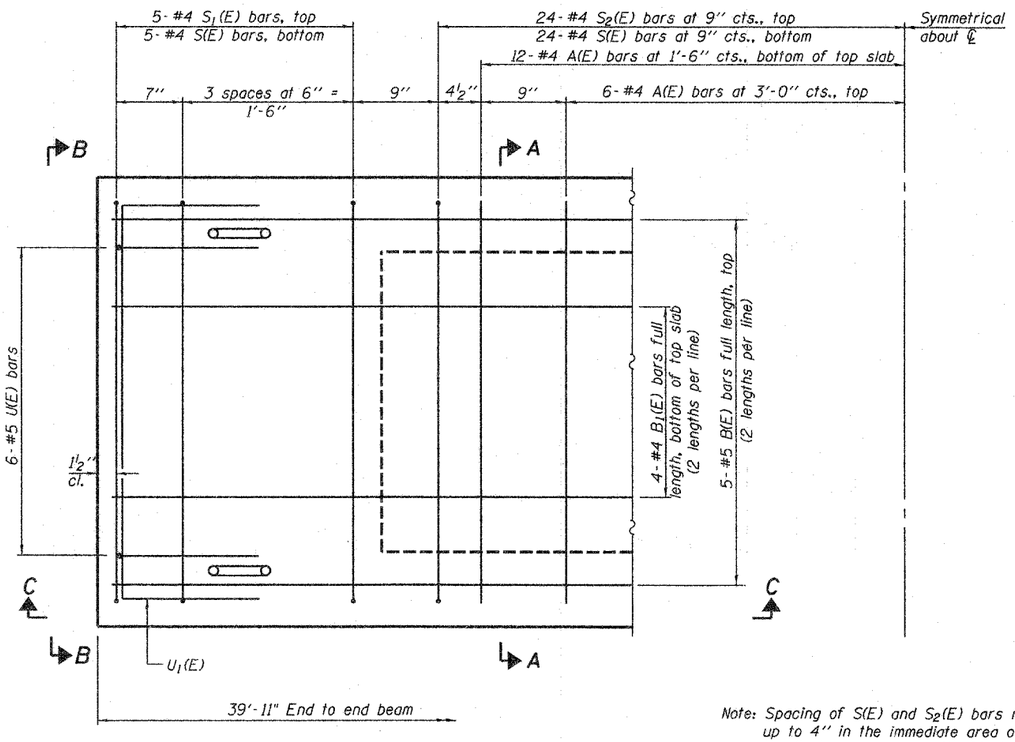

PLAN VIEW

Note: Spacing of S(E) and $S_2(E)$ bars may be adjusted up to 4" in the immediate area of the transverse tie diaphragms to miss the block outs for the transverse ties.

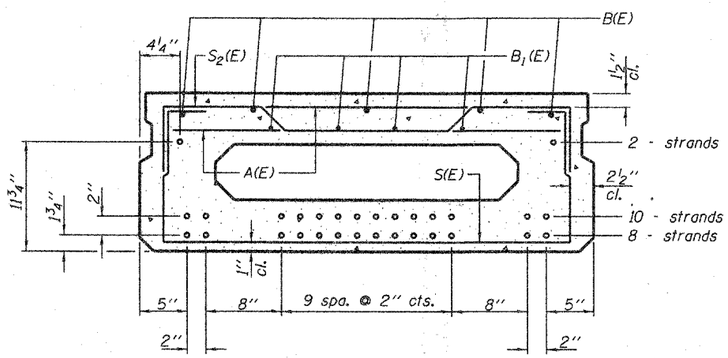

SECTION A-A
(Showing reinforcement and permissible strand locations)

Note: Place the number of strands specified in each row symmetrically about the centerline of beam in the permissable strand locations shown.

BAR LIST
ONE BEAM ONLY
(For information only)

Bar	No.	Size	Length	Shape
A(E)	26	#4	3'-7"	
B(E)	10	#5	20'-11"	
$B_1(E)$	8	#4	20'-8"	
S(E)	38	#4	6'-9"	
$S_1(E)$	10	#4	5'-11"	
$S_2(E)$	48	#4	6'-2"	
U(E)	12	#5	3'-8"	
$U_1(E)$	2	#4	6'-0"	

PPC DECK BEAM DETAILS (17" X 4'-0
SPAN 2
TR ROUTE 234A
OVER JORDAN CREEK
SECTION 04-20118-00-BR
SHELBY COUNTY
STA. 54+35

DESIGNED	SDS
CHECKED	CWC
DRAWN	DLH
CHECKED	SDS

WHKS & CO.
ENGINEERS PLANNERS LAND SURVEYORS
MASON CITY, IOWA DUBUQUE, IOWA AMES, IOWA
E. DUBUQUE, ILLINOIS SPRINGFIELD, ILLINOIS ROCHESTER, MINNESOTA

PD-1748-0 8-29-07

Filename: L:\Jobs\IDOT BBS\6956 BBS Various Various\6956.05\CADD Struc\Shelby 04-20118-00-BR.dgn
Date: 5/23/2008
Operator: dheberling