| F.A.I. RTE. | SECTION | COUNTY | TOTAL SHEETS | SHEET NO. |
|---|---|---|---|---|
| 94 | * | COOK | 44 | 26 |
| STA. 1216+84.45 | | TO STA. 1248+12.50 | | |
| FED. ROAD DIST. NO. | ILLINOIS | FED. AID PROJECT | | |

*(1516.1 & 1717 I-10)

62978

NOTE:
THIS OPTION SHALL BE USED WHEN THE CARRIAGE WALK AREA MEASURES LESS THAN 12" IN WIDTH

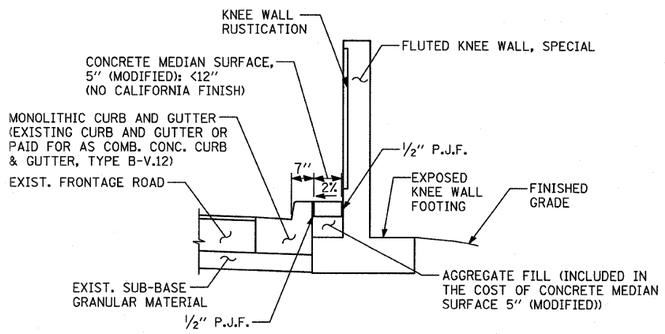


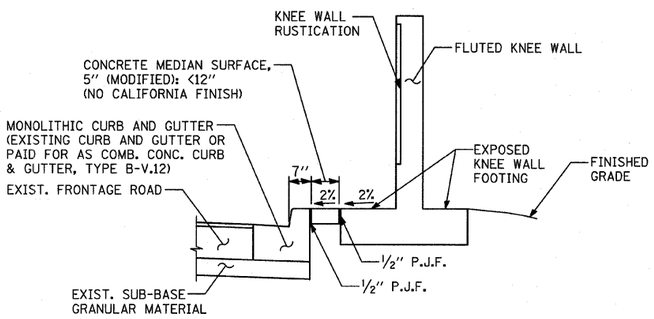


CONCRETE MEDIAN SURFACE, 5" (MODIFIED) "A"

AREA <12" WIDE

NOTE:
THIS OPTION SHALL BE USED WHEN THE CARRIAGE WALK AREA MEASURES 12" TO 18" IN WIDTH

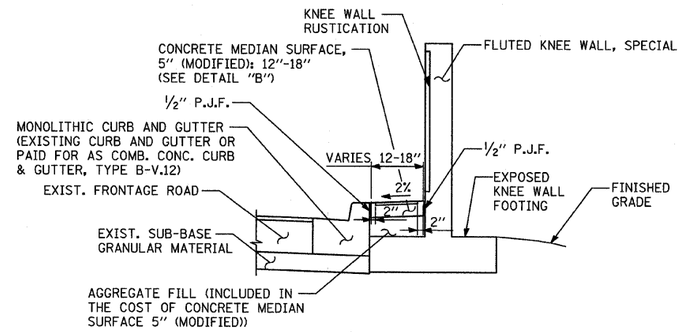


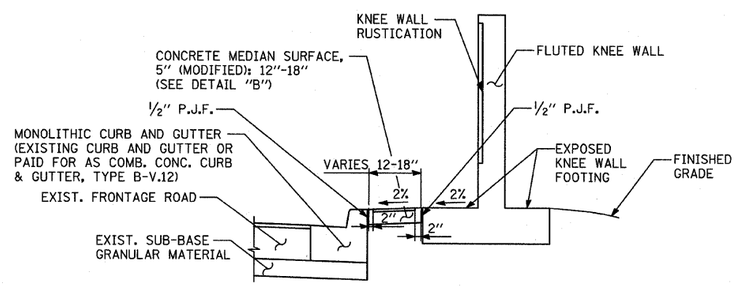


CONCRETE MEDIAN SURFACE, 5" (MODIFIED) "B"

AREA 12"-18" WIDE

NOTE:
THIS OPTION SHALL BE USED WHEN THE CARRIAGE WALK AREA MEASURES 18" OR GREATER IN WIDTH

VARIES PANEL:
- IF THE WIDTH IS >=4" THEN APPLY BROOM FINISH FLUSH TO THE KNEE WALL WITH 4" CALIFORNIA JOINT
- IF THE WIDTH IS <4" THEN SURFACE TO BE HARD TROWELLED (SEE DETAIL A)

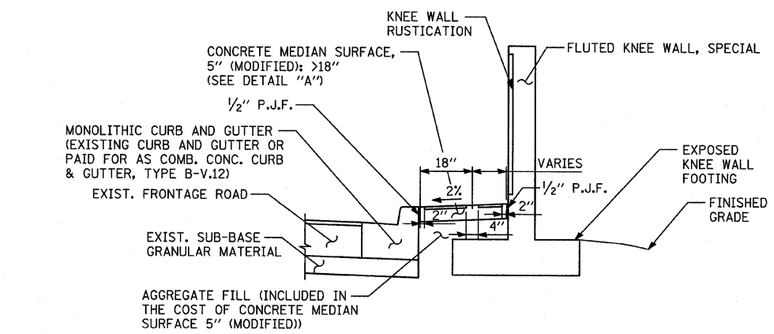


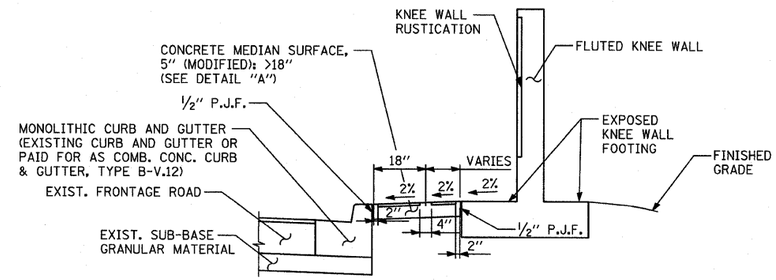


CONCRETE MEDIAN SURFACE, 5" (MODIFIED) "C"

AREA >18" WIDE

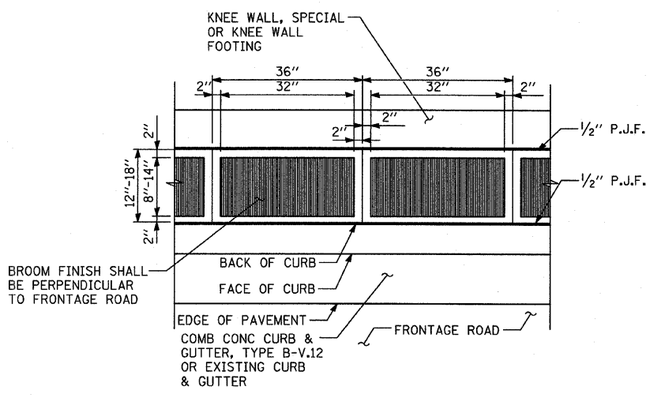


DETAIL "B": COORDINATE WITH CONC. MED. SURFACE, 5" (MODIFIED) "B"

CALIFORNIA FINISH

VARIES PANEL:
- IF THE WIDTH IS >=4" THEN APPLY BROOM FINISH FLUSH TO THE KNEE WALL FACE WITH 4" CALIFORNIA JOINT
- IF THE WIDTH IS <4" THEN SURFACE TO BE HARD TROWELLED

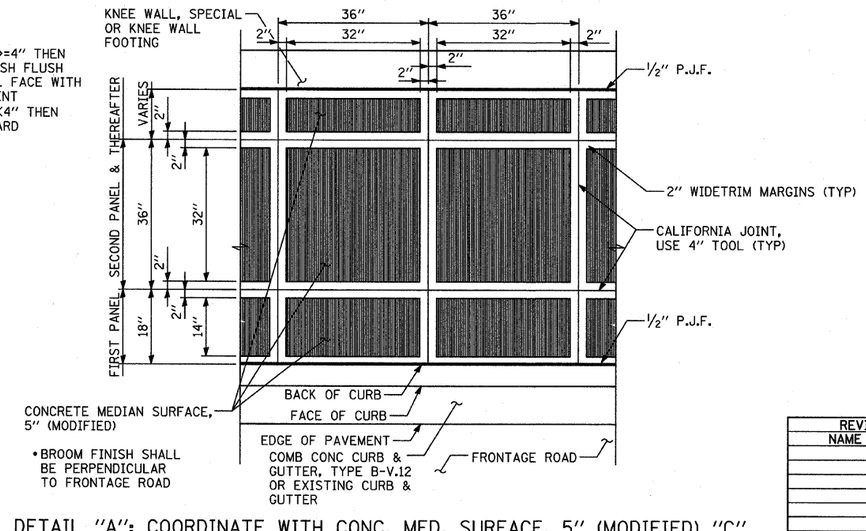


DETAIL "A": COORDINATE WITH CONC. MED. SURFACE, 5" (MODIFIED) "C"

CALIFORNIA FINISH

NOTE:
NOT ALL ITEMS SHOWN ON THIS SHEET ARE PROPOSED. SEE PLANS FOR PROPOSED ITEMS.

TY·LIN INTERNATIONAL

SHEET OF

| REVISIONS | |
|---|---|
| NAME | DATE |
| | |
| | |
| | |
| | |
| | |
| | |
| | |
| | |
| | |

ILLINOIS DEPARTMENT OF TRANSPORTATION

F.A.I. 94 (DAN RYAN EXPRESSWAY)

CONCRETE MEDIAN SURFACE, 5" (MODIFIED) WITH CALIFORNIA FINISH DETAIL

S.N.
SCALE: NONE
DATE: JANUARY 16, 2009
DESIGNED BY:
DRAWN BY: JDF
CHECKED BY: JPM

1/15/2009 11:41:19 AM

P:\0237 3\road\c26b\mc26bst02.3.dgn