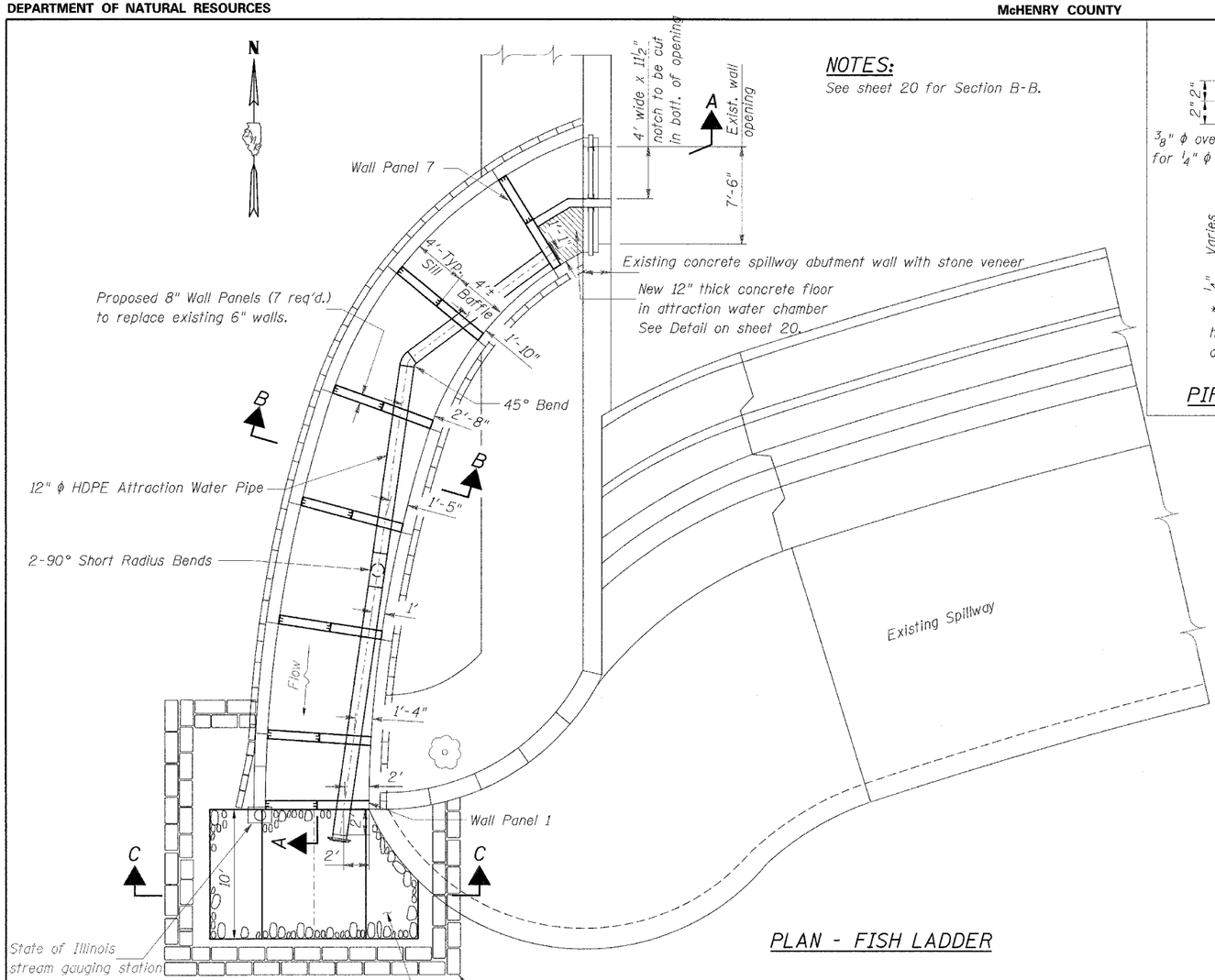

NOTES:

See sheet 20 for Section B-B.

PLAN - FISH LADDER

An approach channel shall be excavated at fish ladder entrance to accommodate fish access. See Section C-C.
Stone Dumped Riprap, Class A4 13 Sq. Yds.
Filter Fabric for Use with Riprap 13 Sq. Yds.

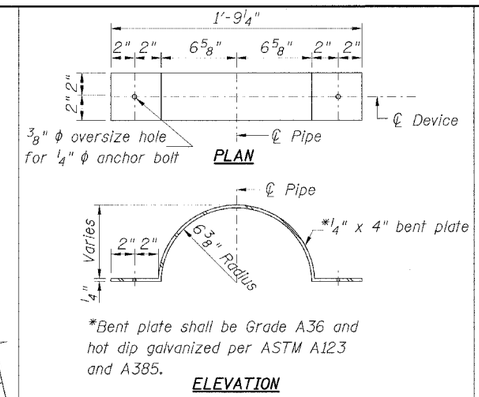

*Bent plate shall be Grade A36 and hot dip galvanized per ASTM A123 and A385.

ELEVATION

PIPE HOLD DOWN DEVICE DETAIL

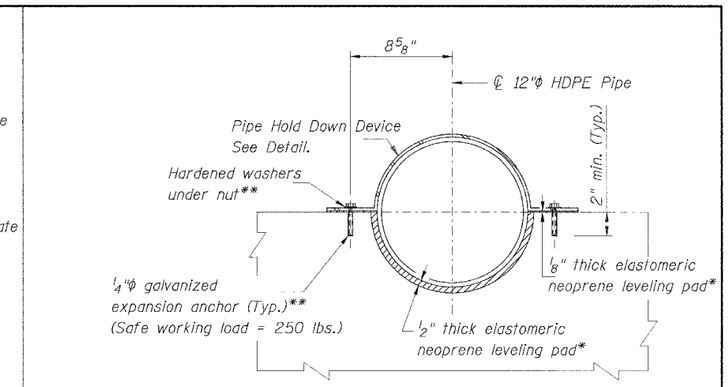

VIEW D-D

(PANELS 1-6)

*The elastomeric neoprene pads shall meet the requirements of Article 1052.02 of the Std. Specifications. Bond the pads to concrete surfaces with an adhesive/sealant as per Article 1052.02(c).

**Anchor bolts, nuts, and washers shall conform to the requiremnts of ASTM A307 and be hot-dipped galvanized according to ASTM A385.

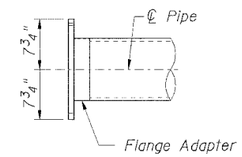

DETAIL "A"

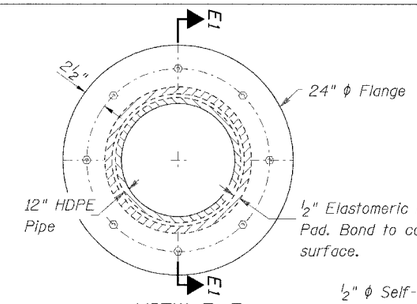

VIEW E-E

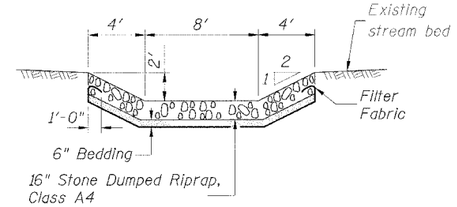

SECTION C-C

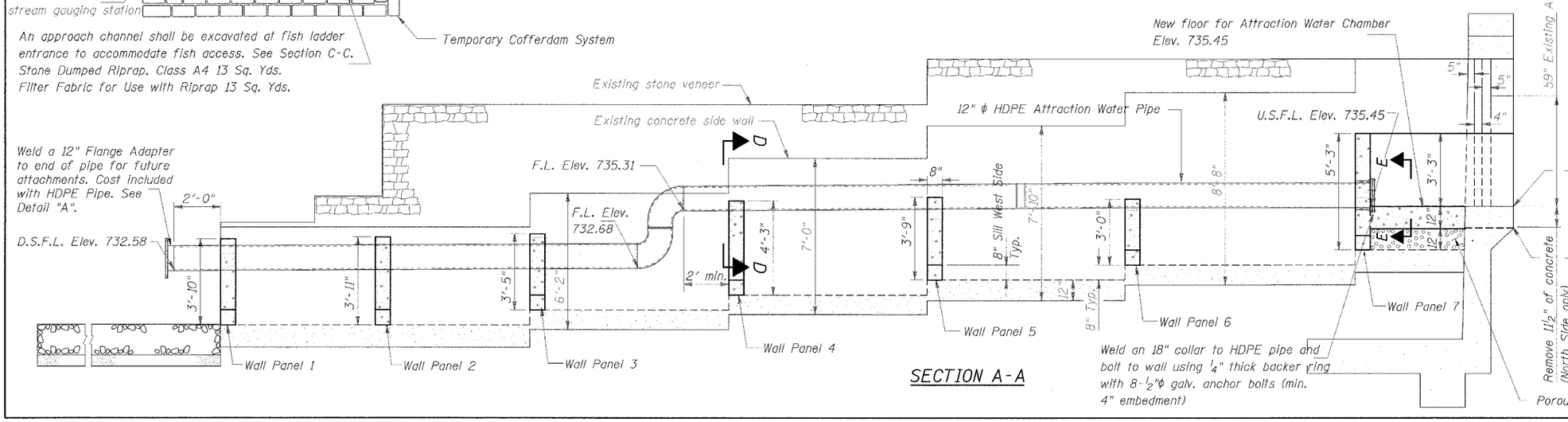

SECTION A-A

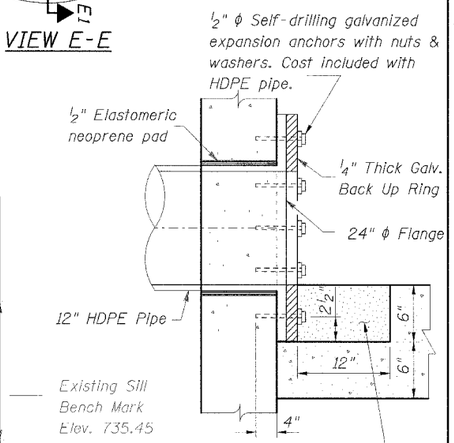

SECTION E1-E1

Designed By T.M.M. Checked By J.J.E.
Drawn By J.J.F. 7-17-00 Checked By T.M.M.