92677

F.A.P. RTE.	SECTION	COUNTY	TOTAL SHEETS	SHEET NO.
322	11-10	CHRISTIAN	310	40
STA.		TO STA.		
FED. ROAD DIST. NO.	ILLINOIS	FED. AID PROJECT		

THE STAGE CONSTRUCTION SEQUENCE IS FOR INFORMATION ONLY. THE CONTRACTOR IS RESPONSIBLE FOR PLANNING AND EXECUTING THIS PROJECT WHICH SHALL BE SUBJECT TO THE APPROVAL OF THE ENGINEER.

STAGE 2

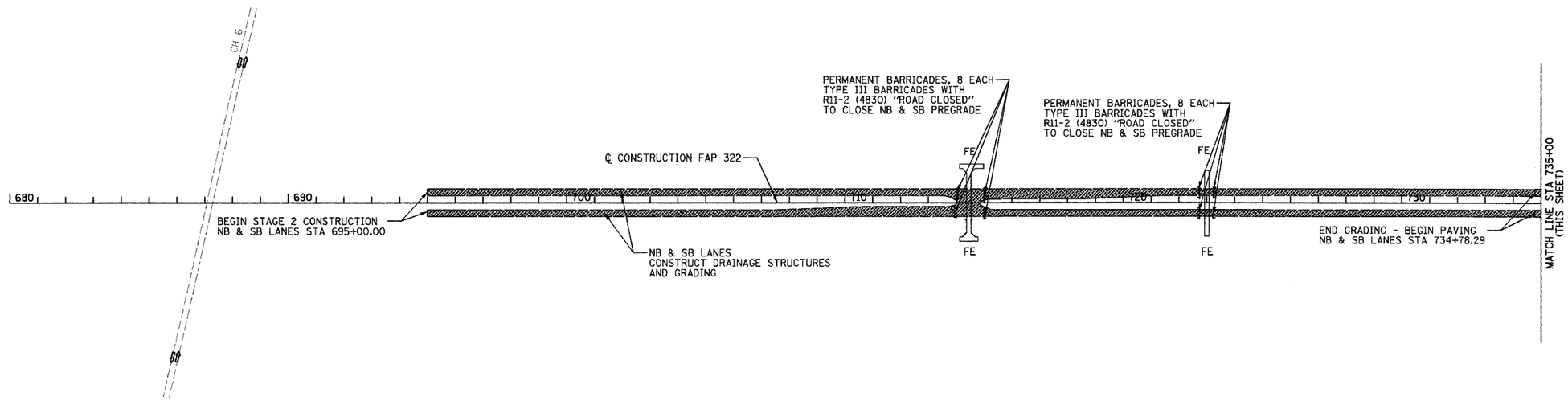

NOTE:

AT ALL TIMES THE NEXT SIDE ROAD TO THE NORTH AND SOUTH OF A CLOSED SIDE ROAD SHALL REMAIN OPEN TO THROUGH TRAFFIC.

PROVIDE ALL WEATHER ACCESS TO ALL PROPERTIES DURING CONSTRUCTION.

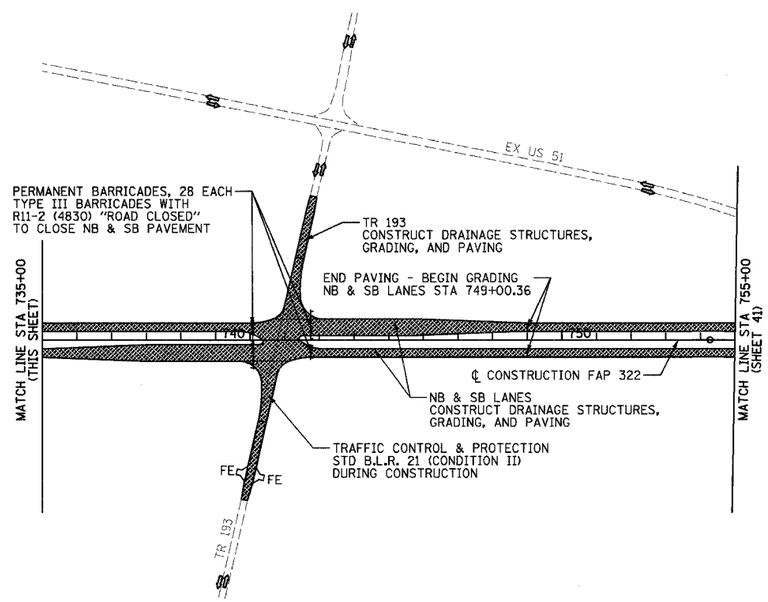

LEGEND

AREA UNDER CONSTRUCTION

DIRECTION OF TRAFFIC

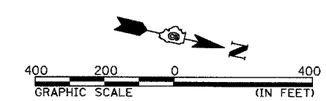

REVISIONS NAME	DATE

ILLINOIS DEPARTMENT OF TRANSPORTATION

TRAFFIC CONTROL AND STAGING
STAGE 2 - 680+00 TO 755+00
FAP 322 (US 51)
SECTION 11-1
CHRISTIAN COUNTY

SCALE: 1"=200' DRAWN BY SEB

DATE 3/17/05 CHECKED BY EBB

3/21/2005

pw:\\Illinois\DIR29\projects\848\sep12.dgn