| F.A.I. RTE. | SECTION | COUNTY | TOTAL SHEETS | SHEET NO. |
|---|---|---|---|---|
| 94 | * | COOK | 907 | 780 |
| STA. 1200+00.00 | TO STA. 1365+00 | | | |
| FED. ROAD DIST. NO. | ILLINOIS | FED. AID PROJECT | | |

* (1516.1, 1717 & 1818) R-9

62695

STATE OF ILLINOIS
DEPARTMENT OF TRANSPORTATION

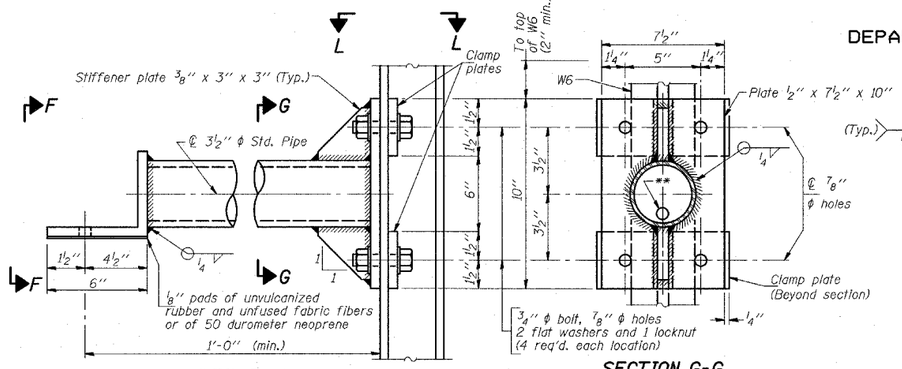


DETAIL A

SECTION G-G

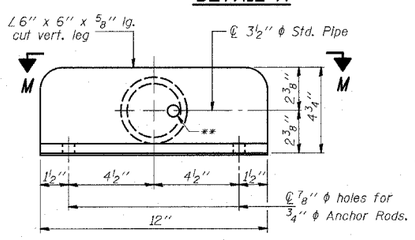


VIEW F-F

**13/16" ϕ holes for galvanizing. After galvanizing, install 7/8" ϕ A307 hot-dip galvanized bolt to close hole in angle. (No bolt required in 1/2" plate.)

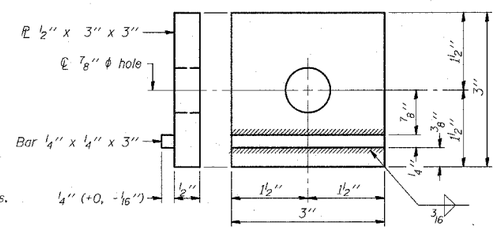


CLAMP PLATE DETAILS

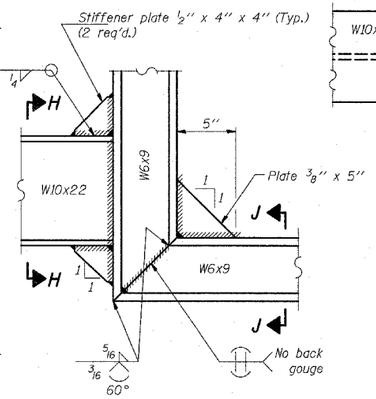


DETAIL B - WELDED
W10x22 TO W6x9 CONNECTION

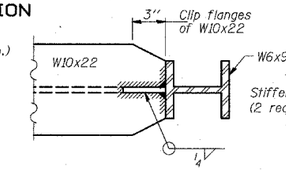


SECTION E-E

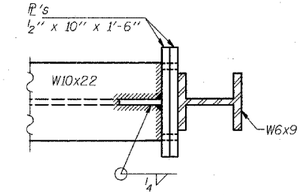


SECTION K-K

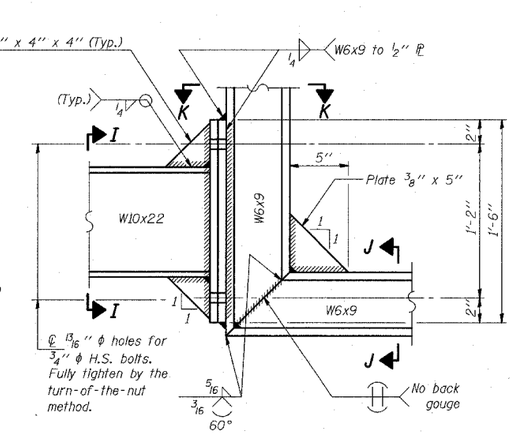


DETAIL B - ALTERNATE BOLTED
W10x22 TO W6x9 CONNECTION

Alternate may be substituted by contractor to facilitate construction or galvanizing, especially on long struts for skewed bridges.

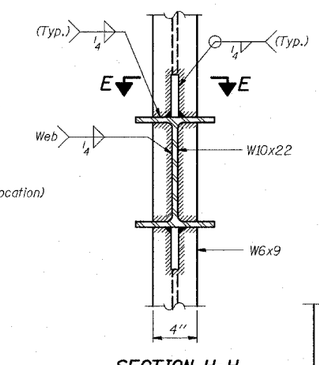


SECTION H-H

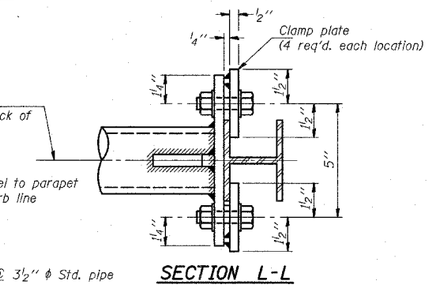


SECTION L-L

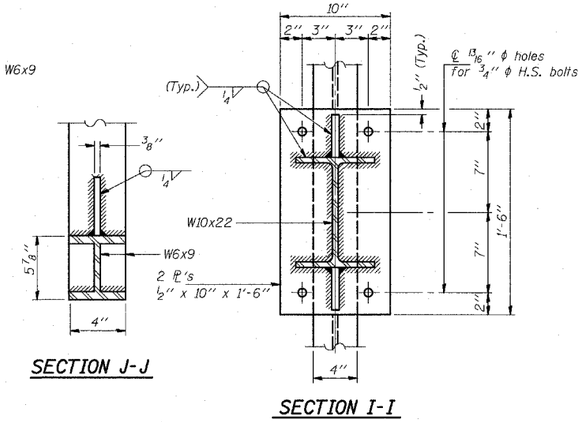


SECTION J-J

SECTION I-I

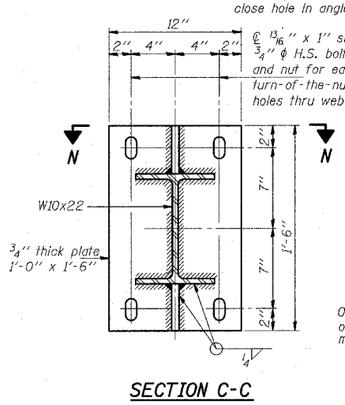


SECTION C-C

Steel beam or girder connection plate details

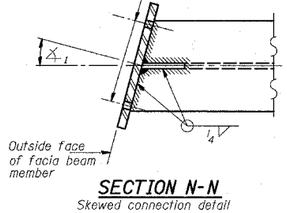


SECTION N-N

Skewed connection detail for W10x22 to facia beam.

Note: For constant slab overhang at facia beam, ∡1 = ∡2 = sign angle. For flared beams or other special cases where ∡1 ≠ ∡2, ∡1 = sign angle.

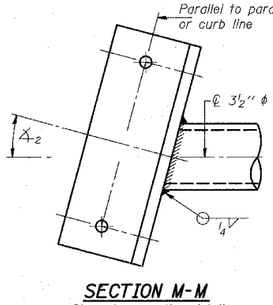


SECTION M-M

Skewed connection detail for 3 1/2" ϕ pipe to parapet.

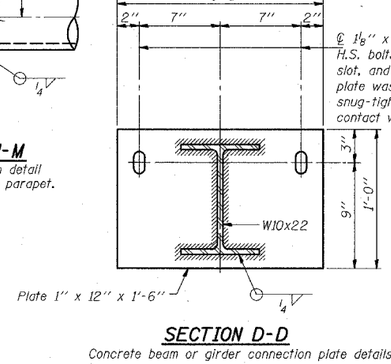


SECTION D-D

Concrete beam or girder connection plate details.

FOR BRIDGE-MOUNTED SIGN STRUCTURES AT STA. 107+16, STA. 1313+24, & STA. 2332+18 USE W6X12 INSTEAD OF W6X9.

| | |
|---|---|
| DESIGNED | - |
| CHECKED | - |
| DRAWN | - |
| CHECKED | - |

- 20

EXAMINED

ENGINEER OF STRUCTURAL SERVICES

PASSED

ENGINEER OF BRIDGES AND STRUCTURES

BM-3 11/1/2002

| NUMBER | REVISION | DATE |
|---|---|---|
| | | |

| REVISIONS NAME | DATE |
|---|---|
| | |

ILLINOIS DEPARTMENT OF TRANSPORTATION

F.A.I. 94 (DAN RYAN EXPRESSWAY)

BRIDGE MOUNT SIGN STRUCTURES
CONNECTION DETAILS

SCALE: AS NOTED DRAWN BY: AMB

DATE: MARCH 25, 2005 CHECKED BY: TB

TY·LIN INTERNATIONAL