F.A.I. RTE.	SECTION	COUNTY	TOTAL SHEETS	SHEET NO.
94	*	COOK	907	673
STA.		TO STA.		
FED. ROAD DIST. NO.	ILLINOIS	FED. AID PROJECT		

* (1516.1, 1717 & 1818) R-9

62695

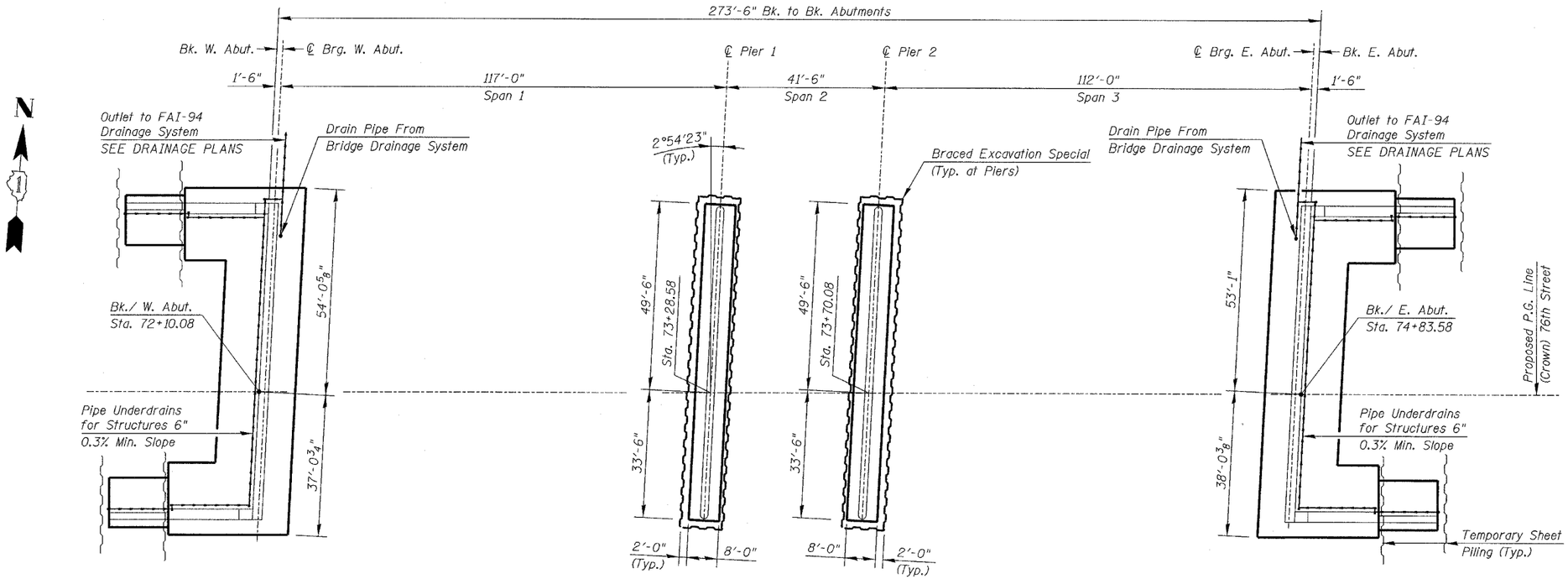

FOOTING LAYOUT

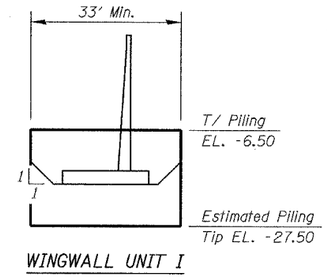

WINGWALL UNIT I

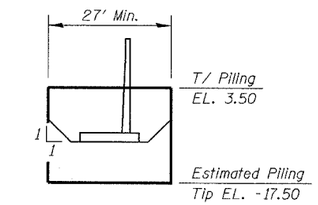

WINGWALL UNIT II

TEMPORARY SHEET PILING DETAILS

The Contractor shall submit a design and computations sealed by an Illinois Licensed Structural Engineer to the Engineer for review and acceptance.

STATION 73+49.33
BUILT 20 BY
STATE OF ILLINOIS
F.A.P. RT. 1541 SEC. 1818 R-9
LOADING HS20
STR. NO. 016-2850

NAME PLATE

See Std. 515001

BILL OF MATERIAL

Item	Unit	Quantity
Braced Excavation Special	Cu. Yd.	216
Name Plates	Each	1
Pipe Underdrains for Structures 6"	Foot	356
Temporary Sheet Piling	Sq. Ft.	5040

Notes:

SEE DWG. S-17 for Bridge Drainage System Details.

Pier Notes:

Backfill material for piers shall be Porous Granular Embankment, except that it shall not be measured for payment, but shall be included in the cost of "Braced Excavation Special".

Restoration/Replacement of disturbed CTA Ballast shall be included in the cost of "Braced Excavation Special".

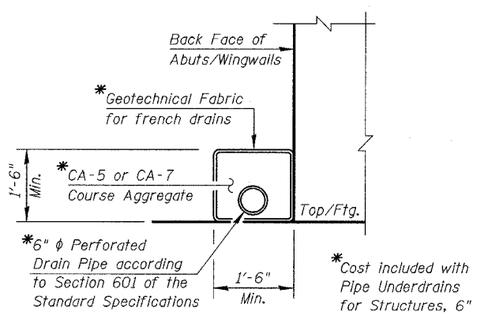

DETAIL-A

Abutment Note:

Backfill material for areas of over-excavation for abutments shall be the same as specified for the adjacent area of Porous Granular Embankment, except that it shall not be measured for payment, but shall be included in the cost of "Structure Excavation".

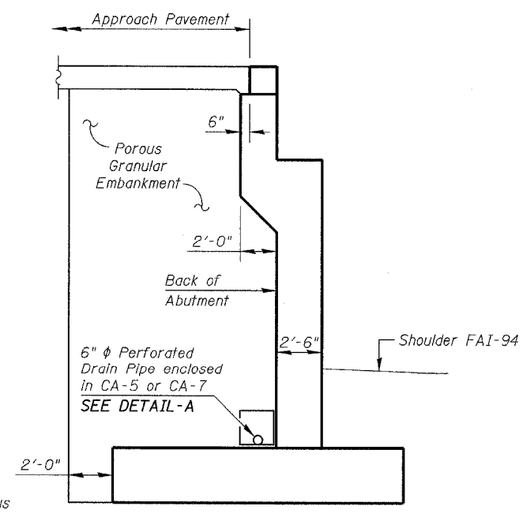

SECTION THRU ABUTMENT

(Dimensions @ Rt. L's)

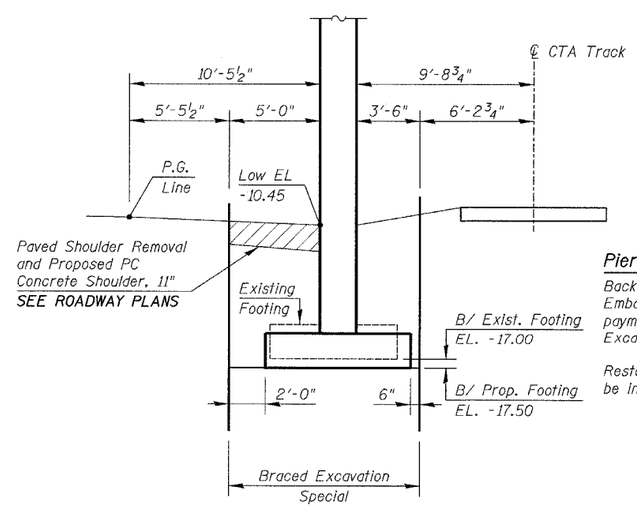

BRACED EXCAVATION SPECIAL

(Dimensions @ Rt. L's)

DWG. S-03 of 42

REVISIONS	
NAME	DATE
REVISED	04/15/05

ILLINOIS DEPARTMENT OF TRANSPORTATION
FOOTING LAYOUT & MISC. DETAILS
76TH STREET OVER FAI-94
FAP ROUTE 1541 SECTION 1818 R-9
COOK COUNTY
STATION 73+49.33
STRUCTURE NUMBER 016-2850

SCALE: NONE DESIGNED BY: TB DRAWN BY: TB
DATE: March 25, 2005 CHECKED BY: WPM CHECKED BY: WPM

KNIGHT
Engineers & Architects

FILE: L:\6592.02\Cad\Sheets\Revised 178\04-15-05\6592-S2850-FP01Rev041505.dgn